TIOGA DOWNS Casino Racing & Entertainment

Exhibit VIII.C.17.a. – Estimated Fresh Water and Electricity Demand

Submit as Exhibit VIII.C.17.a. studies of independent engineers or other experts reporting projections of estimated fresh water and electricity demand (base and peak-period) and sanitary sewer and storm water discharge, each, for the proposed Gaming Facility. Include in those reports an assessment of the feasibility of any plans to accommodate that demand onsite (e.g. by onsite production of electricity, treatment of fresh or waste water, or detention of storm water).

Attached please find the following studies and information responsive to this request:

1. Revised Design Engineer's Report, Wastewater Treatment Facility prepared by Larson Design Group, Revised September 2009

2. Report of Projected Sanitary Sewer Usage prepared by Larson Design Group

3. Report of Projected Water Usage prepared by Larson Design Group

CONFIDENTIAL

REVISED DESIGN ENGINEER'S REPORT

Wastewater Treatment Facility

Prepared for:

TIOGA DOWNS RACINO
2384 West River Road
Nichols, NY 13812

Prepared by:

LARSON DESIGN GROUP
34 Denison Parkway West
Corning, New York 14830

Project No. 6644-001A

(Revised September 2009)

CONFIDENTIAL

REVISED DESIGN ENGINEER'S REPORT

Wastewater Treatment Facility

RECEIVED
SEP 9 2009
DIVISION OF WATER

Prepared for:

TIOGA DOWNS RACINO
2384 West River Road
Nichols, NY 13812

Prepared by:

LARSON DESIGN GROUP
34 Denison Parkway West
Corning, New York 14830

Project No. 6644-001A

(Revised September 2009)

Larson Design Group®

CONFIDENTIAL

REVISED DESIGN ENGINEER'S REPORT

Wastewater Treatment Facility

RECEIVED

NEW YORK STATE DEPARTMENT OF ENVIRONMENTAL CONSERVATION
REGION SEVEN

DATE 4/8/2010

This report, WASTEWATER TREATMENT FACILITY, TIOGA DOWNS RACINO,

is hereby approved pursuant to 6 NYCRR PART 750E, NYSECL ARTICLE 17, subject to the provisions of the LETTER OF APPROVAL issued this day.

STATE COMMISSIONER OF ENVIRONMENTAL CONSERVATION

by _____, P.E.

CONFIDENTIAL

Tab 1 Introduction

Tab 2 Project Planning Area

Tab 3 Existing Facilities

Tab 4 Detailed Design Description

Tab 5 Description of Process

Tab 6 Technical Specifications

Appendices

A: General Information
1. Location Map
2. DEC Approval of PER
3. Application Form D-SPDES Permit

B: Existing Flows
C: Proposed Flows
D: Main Pump Station
E: Office Building Pump Station
F: PATT's and FET's
G: Test Results and RBC Calculations
H: Side Car Aeration
I: Clarifier
J: Ultraviolet/Parshall Flume
K: Aeration Blowers
L: Backup Generators
M: Grease Trap Specifications and Calculations

Larson Design Group
Your Vision, Made Real

CONFIDENTIAL

SECTION 1 – INTRODUCTION

1.1 INTRODUCTION

Larson Design Group (LDG) prepared a *Preliminary Engineering Report (PER) Wastewater Treatment Alternatives for Tioga Downs Racetrack and Casino* in December 2007 to address the current and future wastewater needs for the entire Tioga Downs property. Since this report was issued, data has been continually collected to further refine the design of systems outlined in the PER. This design engineer's report and the accompanied drawings further refines the preliminary design as recommended in the PER for Tioga Downs.

CONFIDENTIAL

SECTION 2 - PROJECT PLANNING AREA

2.1 LOCATION

Tioga Downs Racino is situated in the southern tier portion of Tioga County, New York approximately 2 miles north of the Pennsylvania border and between Interstate Route 86 and the Susquehanna River in the Town of Nichols. See Appendix A for a USGS Site Location Map.

2.2 FUTURE GROWTH

The future expansion of the site was the driving force for the new treatment facility. With that being said the system has been designed to accommodate the planned expansion of the gaming facility and addition of the 136 room hotel and a 30 percent expansion to the gaming facility. Although no further expansion is anticipated the plant has been designed to be able to be expanded to treat more flow with the addition of a 3rd and 4th Rotating Biological Contactor (RBC).

CONFIDENTIAL

SECTION 3 – EXISTING FACILITIES

3.1 HISTORY

The site was originally developed as a horse racing facility in the late 1970's. For a number of years the facility sat vacant with a few attempts at a flea market, equestrian arena, and rodeos. In 2005-2006 the facility, now referred to as Tioga Downs, was reconstructed to hold horse racing events with the addition of a casino gaming facility.

The existing sewage disposal facilities are permitted under New York State Pollutant Discharge Elimination System (SPDES) Permit No. NY-0244881. This permit was transferred from the original property owner, Hawkins Development Company, LLC, to the current Owner, Tioga Downs.

On June 2nd, 2006, the New York State Department of Environmental Conservation (NYSDEC) issued a Consent Order (DEC Case No. R7-20060602-39) to Tioga Downs for a malfunctioning and undersized septic system.

On December 31, 2007, a preliminary engineering report was issued to DEC identifying alternatives to address the current and future wastewater needs of the Tioga Downs facility. DEC reviewed the report and agreed with LDG's suggestions to address the onsite wastewater needs for the existing and future improvements using flow equalization tanks, rotating biological contactor and tertiary filtration. Refer to Appendix A for a copy of the PER response letter, which includes preliminary discharge requirements to be expected. Also in Appendix A is the application for the modification to the New York State Pollutant Discharge Elimination System (SPDES) permit FORM "D" for the Tioga Downs Racino.

3.2 SITE PLAN

The location of the WWTF and two pump stations are shown on the attached engineering drawings, specifically C11, proposed site plan.

3.3 EXISTING FLOW CONDITIONS

Flows and loadings to Tioga Downs were evaluated from April, 2007 to August, 2008 and were used to determine the design capacity of the proposed wastewater facilities. To aide in predicting the future conditions, data from Vernon Downs (a similar facility under the same ownership as Tioga Downs) was obtained and used for estimating and checking parameters such as the flow rate and strength of the wastewater; the two major components used to size the facility. Refer to Appendix B for a summary of sixteen months of water usage for the facility. Table 3.1.1 below summarizes the flow information:

CONFIDENTIAL

Table 3.1.1 - AVERAGE FLOWS

Month	Average Daily Flow(gpd)	Max. Daily Flow (gpd)
April-07	10,985	17,402
May-07	13,662	21,816
June-07	12,585	**24,829***
July-07	15,935	**31,765***
August-07	14,249	**24,371***
September-07	12,025	21,560
October-07	10,194	15,313
November-07	9,448	17,447
December-07	7,575	10,504
January-08	9,007	17,900
February-08	8,889	14,209
March-08	9,918	15,771
April-08	9,640	17,400
May-08	12,921	30,000
June-08	11,066	21,110
July-08	12,009	24,000
August-08	12,856	19,586
Average	**11,351**	**20,293**

*Existing Maximum 3 Month Average

The above flows represent discharge from the grandstand, gaming facility and horse paddock. The data does not include flows from the office and security building. Based on the flow data, the office and security building is not a significant wastewater generator, with a daily flow of approximately 350 gallons during the peak summer months. Although the Office Building is a very small flow it has been taken into consideration when the design flows were determined.

Due to the nature of the business, Tioga Downs experiences larger flows during the summer months with the horse racing season. As evident from Table 3.1.1, the largest average daily flow was during the month of July with almost 32,000 gpd which is approximately 280% greater than the average daily flow. This flow fluctuation was a driving force in the selection and design of the treatment process.

CONFIDENTIAL

3.4 FUTURE FLOW CONDITIONS

Tioga Downs is planning on the addition of a 136 room hotel adjacent to the grandstand and gaming facility. See Appendix C for Predicted Wastewater Flow Rate.

Table 3.2.1 represents the proposed design flow scenario for the Tioga Downs facility.

Table 3.2.1
Proposed Design Flow

Future Flow (gpd)	46,000
Existing Flow (gpd)	26,000
Design Flow (gpd)	**75,000**
Flow rate (gph)*	5,000
Peaking Factor**	2.5
Peak Flow Rate (gph)	12,500

* Flow rate based on a 15-hr flow day, i.e. septic system to see majority of flow in a 15 hour window.
** Assumed based on nature of establishment with variable times of large flow occurrences.

CONFIDENTIAL

SECTION 4 – DETAILED DESIGN DESCRIPTION

4.1 SUMMARY OF IMPROVEMENTS

The following list summarizes the proposed improvements:

Collection System

- Install a duplex pump station with 150 gpm VFD submersible pumps to be set in a 6' wet well with a precast valve vault to connect to the 4" force main
- Place 4-inch HDPE force main from the valve vault to the influent manhole at the wastewater treatment facility
- Install a duplex grinder pump station for the office building wastewater and connect to the 4" force main through a 1 1/4" force main

Preliminary / Primary Treatment

- Install splitter manhole
- Install two 37,000 gallon-precast-concrete Primary Anaerobic Treatment Tanks (PATT's)
- Install two 20,000 gallon-precast-concrete Flow Equalization Tanks (FET's)

Secondary Treatment

- Install two, three-stage Rotating Biological Contactor's (RBC's), with Sidecar Aeration
- Install required air lifts as outline in the Engineering Plans
- Install two 14' diameter center feed clarifiers
- Install 6" inverted siphon sludge return line to splitter manhole
- Install sump pump return to 3" backwash force main to return to influent manhole

Disinfection

- Install a UV unit
- Install gravity line to the outfall with a tideflex check valve

Electrical

- Provide portable trailer mounted generator to provide emergency power to the pump stations
- Install emergency generator with automatic transfer switch at the wastewater treatment facility

Miscellaneous

- Upgrade existing adjacent structure to accommodate control equipment, blowers, heating system, and spare parts.
- Grease traps will be installed for future food service areas.

CONFIDENTIAL

4.2 COLLECTION SYSTEM

Main Pump Station

The main pump station will be a duplex submersible pump station and will be located behind an existing building located in the infield of the track. The pump station will be comprised of a 6' diameter wet well and 8'x5' valve vault. The proposed 6' diameter concrete wet well will house the two Variable Frequency Drive (VFD) pumps. The new pump station will exceed the proposed hotel expansion flow and will include a 2.5 design peaking factor. The pumps will run in parallel and will be set as a lead / lag type system with pumping capabilities up to 300 gpm. VFD's will be installed on both of the submersible pumps to improve performance and improve the life of the pumps. The pumps were designed for 54 feet of total dynamic head. The new pump equipment will include stainless steel slide rails, a crank hoist and other pertinent provisions for pump removal and maintenance. Basic design criteria are presented in Table 4.3.1. Refer to Appendix D for manufacturer cut-sheets on the proposed pumps and pump curves. A separate valve vault is designed to be placed adjacent to the wet well for easy access to valves. A spare pump will be provided.

Table 4.3.1: PROPOSED PRIMARY PUMP STATION DESIGN CRITERIA

Pump Station Type	6' Diameter Concrete Wet Well
Manufacture Used as Basis of Design	Hydromatic
No. of Pumps	2
Pump Type	Submersible with slide rails
Pump Capacity (ea.)	150 gpm @ 54 feet TDH
Control Type	VFD
Suction and Discharge Piping Size	4"
Emergency Power	Connection for portable generator

Office Building Pump Station

The offices in the barn area have several restrooms that must be incorporated into the system. A small duplex grinder pump station will be installed near an existing manhole to the east of the office building and will pump sewage into the 4" force main. The grinder pump station will be factory assembled and the wet well will be constructed of high density polyethylene (HDPE). The pump station will be controlled by manufactures recommended controls. The system is planned to pump at 10-15 gpm. The system will have a redundant check valve at the connection to the force main to prevent any back flow when the main pump station is pumping. Refer to Appendix E for manufacturer cut-sheets on the proposed duplex grinder pump station.

Primary Force Main

The 4" HDPE force main is designed to act as the conduit for the sewer to travel from the pump station located in the track infield to the influent manhole. The Office Building Pump Station will tie into this force main with 1 1/4" HDPE as indicated on the drawings. Refer to technical specifications for information on the proposed piping. Plug valves and cleanouts will be installed as indicated on the plans. The method of installation for the force main will be directional drilling. Using HDPE and the directional drilling method provides flexibility to the exact placement of the force main and reduces earth disturbance. Another reason for this approach is to minimize disruption of the operation and events at Tioga Downs.

CONFIDENTIAL

4.3 PRIMARY TREATMENT

PRIMARY ANAEROBIC TREATMENT TANKS (PATT'S)

Efficiently designed and operated primary sedimentation tanks, aka septic tank, will remove from 50 to 70 percent of the suspended solids and from 25-40 percent of the BOD. The tanks provide primary treatment by creating quiescent conditions inside. There will be two tanks sized at 37,000 gallons each. Gases generated from digestion of the organics are vented out to atmosphere. The inlet and outlet structures shall be designed to limit short circuiting and retain sludge and scum layers. Manways are provided in the tank cover to allow access for periodically removing the contents, including the accumulated scum and sludge. The septic tank will be pumped on a regular basis, at least once a year.

Septic tanks must have sufficient volume to provide an adequate hydraulic residence time for sedimentation. Hydraulic residence time of 16 to 24 hours is recommended. Based on design flow data a hydraulic residence time of 24 hours will be provided with the proposed 37,000 gallon tanks.

Sludge which accumulates as a result of this treatment process must be disposed of. Liquid hauling of the waste sludge will be employed for the Tioga Downs system. The Town of Owego and/or the Town of Nichols each have facilities that may accept the septage and waste sludge. Refer to Appendix F for design calculations and manufacturer cut-sheets on the proposed PATT's.

FLOW EQUALIZATION TANKS (FET'S)

Accommodating wide variations in flow rates and organic mass loadings is one of the major challenges faced in design of the wastewater treatment facility. Because the naturally occurring variations in the generation of wastewater, specifically for a facility of this type that has events such as races, gaming events and concerts, the wastewater treatment facility must process unsteady wastewater flows. Efficiency, reliability and control of the unit process operations within the plant can be adversely affected by the cyclic nature of the waste generation, resulting in possible violations of effluent standards. Equalization of influent flow can dampen the diurnal variations to achieve a relatively constant loading of downstream treatment processes.

The primary objective of a FET is simply to dampen the diurnal flow variation and thus achieve a constant or nearly constant flow rate. An additional benefit is a reduction in the variability of the concentration and mass flow of wastewater constituents by blending in the equalization basin. This more uniformly loads downstream processes with organics, nutrients, and other suspended and dissolved constituents.

With a diurnal flow pattern, the volume required to achieve the desired degree of equalization can be determined from a cumulative flow volume hydrograph over a representative 24-hour period. The volume required for equalization of flows will generally vary from approximately 20 to 40 percent of the 24-hour flow for smaller plants. With this type of a facility it is anticipated that there will be significant spikes in flow. The FET's will be sized at 20,000 gallons each, approximately 55% of the daily flow. See Appendix F for calculations for the FET's.

CONFIDENTIAL

4.4 SECONDARY TREATMENT

Secondary treatment is a process that removes dissolved and suspended organic solids carried over from primary treatment. This process involves the biological treatment of wastewater utilizing many different microorganisms in a controlled environment.

In the biological treatment process, microorganisms, in the presence of oxygen, utilize the colloidal and dissolved organic constituents in the wastewater as a source of food to obtain energy needed for their life cycle. As a result of this biological oxidation process, the organics in the wastewater are transformed into stable end products. Based on the design flow and applicability to the site conditions a rotating biological contactor (RBC) was chosen for secondary treatment.

ROTATING BIOLOGICAL CONTACTOR (RBC)

The RBC is a package treatment, fully integrated system consisting of a secondary biological treatment vessel and secondary clarifier. The package system is delivered to the site for installation in cast-in-place concrete basins. The system is supplied with all required mechanical components. Influent and effluent piping and electrical supply must be field installed.

The process consists of a series of disks mounted on a horizontal shaft and placed in a tank with a contoured bottom. Rotating reactors use a fixed film biomass on rotating media for biological treatment. The rotating medium, typically made from sheets of high-density plastic, provides a surface on which organisms grow and contact organic wastewater constituents and oxygen from the air. The rotating reactor carries a film of wastewater into the air. The wastewater trickles down the surfaces of the contactor and absorbs oxygen from the air. Organisms in the biomass remove both dissolved (DO) and organic materials from the wastewater.

As the biomass (fixed film) becomes submerged in the water the film is sheared off. Excess microorganisms and other solids are continuously removed from the film adhering to the disks. The disk rotation also provides mixing, which keeps the sloughed solids in suspension so they can be carried through each stage of the RBC to the secondary clarifier.

With the ability to recycle the effluent down stream of the RBC, this treatment process is able to operate at variable loadings. This is an important characteristic due to the seasonal and diurnal flow conditions at Tioga Downs.

To size the RBC for the Tioga Downs facility three 24 hour composite tests were taken. These sample results were taken and added to what would be expected from the future expansion of the facility to determine the design parameters. To further aid in sizing the RBC samples from Vernon Downs were used as a reference. Refer to Appendix G for sampling results and design calculations.

CONFIDENTIAL

AERATION

Aeration distinctly improves BOD and ammonia removal capacities of RBC plants and is the most convenient and inexpensive way to improve RBC performance. Aerated biomass has uniform color and thickness. Unaerated biomass is often thick, shaggy, discolored, and blotchy. Aerated RBC performance is maximized by assuring the most favorable conditions for the "bugs" that do the job in wastewater treatment.

Diffused air provides dissolved oxygen in the wastewater in addition to providing a scrubbing action, as coarse bubbles gush into and through media passages, abrading and dislodging all but a thin layer of select, very active biomass. The passages of the rotating media create near-ideal turbulent conditions for mixing and transferring oxygen to the liquid and biomass. Oxygen cannot penetrate the greater depths of uncontrolled biomass growth. Subjacent layers become anoxic or anaerobic, competing and interfering with the favorable aerobic organisms and releasing products of respiration contributing to beggiatoa and other nuisance organisms. Under these adversities biological treatment is impaired and, in most cases, resulting biological floc sloughed from the RBC is difficult to settle, hence effluent quality suffers further from poor solids capture in the secondary clarifier. Effective RBC aeration will correct and preclude this undesirable condition.

RBC aeration is more effective than preaeration in treating septic or odorous wastewaters. Simple aeration in an equalization tank adds dissolved oxygen and may strip and exhaust odors to the atmosphere but does little else to enhance system treatment. Conversely, in all but the most unusual cases, applying aeration to RBC's accomplishes those same ends, plus, in the presence of the active biomass, substantially improves treatment and biologically oxidizes odor-causing compounds. Refer to Appendix H for manufacturer cut-sheets on the proposed diffuser heads and blowers.

CLARIFICATION

As required in the NYSDEC Design Standards, 1988; final settling is included downstream of the RBC. As indicated in the previous section, the slime layer grows on the RBC meter until it becomes too thick to adhere to the plastic media and then sloughs off or the aeration process forces the layer off. This material is carried with the wastewater to the secondary clarifier where it is removed by sedimentation. The sludge and scum generated from the clarifier sedimentation are returned to the PATT's by the air lifts.

This system will have two secondary clarifiers that will process effluent from all three (and possible future fourth) RBC's. The side wall depth of the clarifiers will be 10 ft and the weir over flow rate will be 3,575 gpd/LF. See Appendix I for clarifier calculations.

CONFIDENTIAL

4.5 UV DISINFECTION

In order to remove organic matter and total suspended solids beyond what can be accomplished by conventional secondary treatment process to meet the NYSDEC Preliminary Effluent Limits proposed for a secondary stream, advanced wastewater, or tertiary, treatment is recommended. Over the past 25 years, a wide variety of treatment technologies have been studied, developed, and applied for the removal of the residual constituents found in treated effluent.

The use of ultraviolet light is recommended as no residual products will be introduced into the wastewater, as opposed to the use of chlorine or iodine. See Appendix J for UV disinfection calculations.

4.6 OUTFALL

To maintain a stationary permanent structure to discharge effluent water, a concrete outfall with a riprap apron will be needed. The 8" SDR 35 outlet pipe will penetrate the concrete endwall and will have a rubber duckbill check valve. The check valve will open with water being discharge from the plant and will not allow flood waters to backflow into the plant. This valve also prevents rodents and insects from entering the plant.

4.8 MISCELLANEOUS

A licensed Wastewater Operator will be on-site daily to oversee the operation and maintenance of the plant.

Grease traps will be installed in the new hotel facility and all future food service areas. The design requires a total of 18,750 gallons of capacity and includes four 5,000 gallon grease interceptor tanks installed in parallel. See Appendix M for the detailed information on the grease traps.

To operate the plant a number of electrical controls and motors will be needed. The adjacent existing shed will be the location for these controls and motors. The upgrades required to properly house this equipment will be included in this project. Currently this building is used for general storage. Operation and maintenance manuals to be provided for the plant at initial start up.

CONFIDENTIAL

SECTION 5 – DESCRIPTION OF PROCESS

The existing collection system will remain in tack until the wastewater facilities are all online. At that time, a connection will be made at the infield of the track, where a wet well containing two 7.5 hp VFD pumps will convey the raw sewage through the valve vaults, including check valves, into the new 4" HDPE force main. The force main will transport the sewage approximately 2,260 lineal feet to the influent manhole. A connection from the offices in the barn area will also be required. A grinder pump will push sewage through 1 ¼" HDPE force main and connect to the 4" force main.

From the influent manhole the sewage will flow via gravity into the splitter manhole. The splitter manhole will split the flow evenly between the PATT's. The sewage then will enter the upper portion PATT's and the solids will either settle out or float in the two chambered 37,000 gallon tanks. After the water goes through the PATT's, it enters the FET. The wastewater exits the FET at the base and flows by gravity into the bucket feed well at the head works of the RBC unit. The bucket feed unit is driven from the shaft of the RBC and the buckets pick the sewage up. When the bucket reaches a certain height it empties into the bucket's shaft and flows into the first stage of the RBC unit. The sewage then flows out of the waterline into a weir box. The flow will go through a flash mixer for future use as an injection point for chemicals if needed. The sewage will enter a splitter box, which will split the flow equally in half. The flow will enter the 14' clarifier. From the clarifier, the flow enters the UV unit, and out to the outfall. See drawing C11 for a site plan showing all of the improvements.

CONFIDENTIAL

SECTION 00010
TABLE OF CONTENTS

PAGES

DIVISION 2 - SITE CONSTRUCTION

02300 Earthwork ---------- 15
02324 Trenching ---------- 5
02535 Pressure Sewer ---------- 3
02539 Sanitary Sewer ---------- 9
02952 Piping Systems Testing ---------- 8

DIVISION 3 - CONCRETE

03300 Cast-In-Place Concrete ---------- 4
03470 Precast Concrete Vaults ---------- 4

DIVISION 9 – PAINTING

09900 Painting ---------- 13

DIVISION 11 – EQUIPMENT

11060 Piping and Valves Inside of Structures ---------- 5
11204 Weir Plates, Scum Baffles, and Brackets ---------- 3
11210 Wastewater Pumps ---------- 11

END OF SECTION

CONFIDENTIAL

CONFIDENTIAL

SECTION 02300
EARTHWORK

PART 1 - GENERAL

1.01 SUMMARY

A. Section Includes

1. Excavation
2. Fill and backfill
3. Compaction
4. Grading
5. Topsoil
6. Seeding

B. Related Sections

1. SECTION 02150 – Erosion, Sediment, Pollution Control.
2. SECTION 02230 - Site Clearing
3. SECTION 02320 - Trenching

1.02 SUBMITTALS

A. Comply with requirements of SECTION 01330 – Submittals Procedures and as modified below.

B. Samples

1. Fill Materials: Submit samples of each type of gravel and stone specified for fill, naming source for each material and including sieve-analysis indicating compliance with specified gradation requirements for specific fill material.

   a. Submit additional samples to Engineer's field office at Project Site consisting of approximately 1 gallon by volume in substantial container.
   b. Obtain Engineer's approval of fill materials before beginning fill material placement.

C. Quality Control Submittals

1. Certificates: Submit seed vendor's certified statement for each grass seed mixture required, stating botanical and common name, percentage by weight, and percentages of purity, germination, and weed seed for each grass seed species.

D. Contract Closeout Submittals: Comply with requirements of SECTION 01700, including submission of operating and maintenance instructions.

1.03 QUALITY ASSURANCE

CONFIDENTIAL

A. Regulatory Requirements: Comply with applicable requirements of OSHA, local governing authorities, and State Department of Labor.

1. Soil Erosion and Sediment Control (SESC) Plan: Comply with requirements of Section 02150 Erosion, Sediment, Pollution Control.

1.04 PROJECT/SITE CONDITIONS

A. Field-verify existing topography before beginning site construction operations. Immediately report any discrepancies in elevations affecting site construction to Architect. Provide profile information on existing site conditions and verification of existing topographic information to Architect prior to beginning site construction.

1. Beginning site construction without this profile information and written notification indicates Contractor's acceptance of existing topography indicated on Drawings as accurate.

2. Adjustment to Contract Sum will not be made for discrepancies brought to Owner's attention after site construction has begun.

B. Existing Utilities: Locations of known underground utilities are indicated on Drawings. Consult local utility companies and Underground Facilities Protection Organization (U.F.P.O.) to determine existence of uncharted or incorrectly charted piping or other utilities prior to excavation.

1. Should uncharted or incorrectly charted piping or other utilities be encountered during excavation, consult Architect immediately for direction. Cooperate with Owner and Utility Company in keeping respective services and facilities in operation. Repair damaged utilities to satisfaction of utility owner.

2. Locate existing underground utilities by careful hand excavation. If utilities are to remain in place, provide protection from damage during construction operations.

3. Do not interrupt existing utilities serving facilities occupied and used by Owner or others, except when permitted in writing by Engineer after temporary utility services have been provided.

PART 2 – PRODUCTS

2.01 MATERIALS

A. Fill and Backfill: Provide fill materials free of rock or gravel larger than stated size, debris, waste, frozen materials, vegetable matter, and other deleterious substances.

1. Off-Site Materials:

a. Granular Fill: Import all granular fill types from off-site sources.

b. Non-Granular Fill: Where quantity of approved fill and backfill non-granular materials required exceeds that available from on-site stock-piles, provide materials from off-site sources approved by Architect and spread as directed or required by Drawings and specifications.

CONFIDENTIAL

2. Granular Fill: Where indicated, provide following fill materials consisting of stone, sand, and gravel, or blends of these materials, free of slag, complying with New York State Department of Transportation (NYSDOT) Standard Specification, Section 304, Type 1, Type 2 or Type 4, as modified below:

   a. Type 1 Fill (NYSDOT Type 1 / Granular Fill) gradation requirements:

	SIEVE DESIGNATION	% BY WEIGHT PASSING SQUARE MESH SIEVES
1)	3"	100%
2)	2"	90% to 100%
3)	1/4"	30% to 65%
4)	#40	5% to 40%
5)	#200	0% to 7%

   b. Type 2 Fill (NYSDOT Type 2 / Crushed Ledge Rock Stone) gradation requirements:

	SIEVE DESIGNATION	% BY WEIGHT PASSING SQUARE MESH SIEVES
1)	2"	100%
2)	1/4"	25% to 60%
3)	#40	5% to 40%
4)	#200	0% to 7%

   c. Type 4 Fill (NYSDOT Type 4 / Select Granular Fill) gradation requirements:

	SIEVE DESIGNATION	% BY WEIGHT PASSING SQUARE MESH SIEVES
1)	2"	100%
2)	1/4"	30% to 65%
3)	#40	5% to 40%
4)	#200	0% to 7%

   d. AASHTO #57 Coarse Aggregate gradation requirements:

	SIEVE DESIGNATION	% BY WEIGHT PASSING SQUARE MESH SIEVES
1)	1 1/2"	100%
2)	1"	95% to 100%
3)	1/2"	25% to 60%
4)	#4	0% to 10%
5)	#8	0% to 5%

   e. Strip source of material of all sod, topsoil, overburden, and other objectionable material before excavation operations for material are started, and keep stripped at minimum 30 feet from top of working face of source at all times.

CONFIDENTIAL

3. Drainage Fill: Washed, uniformly graded mixture of crushed stone, crushed or uncrushed gravel, in accordance with ASTM D2321 Class 1A material with 100% passing a 1-1/2" sieve, not more than 5% passing a No. 4 sieve and not more than 5% passing a No. 200 sieve.

4. Utility Pipe Bedding: Fill materials matching AASHTO #57 Coarse Aggregate gradation and requirements.

5. Other Back Fill Materials: Provide and maintain on-site material, approved by Engineer for use as backfill in locations where backfill material is not otherwise specified, free of stones larger than 6", roots, organic material, construction debris and trash.

B. Topsoil: Provide material stripped from surface of Site and stock piled. .

1. Where quantity of topsoil required exceeds that available from on-Site stockpiles, provide imported topsoil and spread as directed or required by Drawings.

2. Obtain imported topsoil from local sources or from areas having similar soil characteristics to that found at Site. Obtain topsoil only from naturally, well drained sites where topsoil occurs in depth of not less than 4"; do not obtain from bogs or marshes.

3. Before delivery of imported topsoil, furnish Engineer with written statement giving location of properties from which topsoil is to be obtained, names and addresses of Owners, analysis of topsoil, depth to be stripped and crops grown during past 2 years.

4. Where quantity of existing topsoil stripped from Site exceeds amount required to maintain specified topsoil depths, increase topsoil depth as required to ensure that all existing topsoil remains on Site. Remove excess fill material generated by this operation from Site and legally dispose of it.

5. Comply with following requirements:

   a. Imported Topsoil: Screened, natural, fertile, agricultural soil typical of locality, capable of sustaining vigorous plant growth, from well drained site free of flooding, not in frozen or muddy condition. Topsoil to be free from subsoil, slag, clay, stones, lumps, live plants, roots, sticks, crabgrass, coughgrass, noxious weeds, and foreign matter.

   b. Existing Topsoil: Screened, natural, fertile agricultural soil capable of sustaining vigorous plant growth, not in frozen or muddy condition. Topsoil to be free from subsoil, slag, clay, stones, lumps, live plants, roots, sticks, crabgrass, coughgrass, noxious weeds, and foreign matter.

6. Provide amendments for existing and imported topsoil as follows:

   a. Apply approved calcium or sulfur compounds to correct pH level to be between 5.9 and 7.0.
   b. Provide organic compost as specified in this Section and apply per Section 3.03.

C. Organic Compost: Commercially composted organic product of humus nature containing no admixture of refuse or material toxic to plant growth, and free from stones, lumps, brush, roots or similar objects larger than 1" in diameter.

CONFIDENTIAL

1. Provide compost created through the controlled biological decomposition of organic material, which is sanitized through the generation of heat, and stabilized to the point at which it is beneficial to plant growth.

2. Organic Compost to comply with the following requirements:

   a. PH 6.0-8.0
   b. Soluble Salts Concentration ..... 5 dS/m (mmhos/cm) (max.)
   c. Moisture Content ..... 30-60 %, wet weight basis
   d. Organic Matter Content ..... 40-85%, dry weight basis
   e. Particle Size ..... 97-100% passing ½" sieve, dry weight
   f. C:N Ratio ..... 15:1 – 30:1, dry weight basis
   g. Physical Contanimants ..... <1%, dry weight basis
   (man-made inerts)

3. Perform composting operations in controlled interior environment at temperatures sufficient to kill all weeds and pathogens.

D. Seeding: Provide fresh, clean, new-crop seed complying with tolerance for purity and germination established by Official Seed Analysts of North America. Provide seed of grass species, proportions and minimum percentages of purity, germination, and maximum percentage of weed seed, as specified. All blends to be guaranteed minimum 95% pure and having minimum germination rate of 85% mixed as follows:

1. General Lawn Mixture (Upstate NY)

	Name	Variety	% Weight of Pure Live Seed
a.	1/3 Equal Mixture of Brilliant / Princeton-P105 / Northstar Blend Kentucky Bluegrass (Poa pratensis)	Commercial	70%
b.	Prelude Perennial Ryegrass (Lolium perenne)	Commercial	20%
c.	Reliant Fine Fescue (Festuca rubra)	Commercial	10%
			100%

2. Commercial Fertilizer

   a. Complete fertilizer of neutral character, with some elements derived from organic sources and containing following percentages of available plant nutrients:

      1) For lawns, provide fertilizer with not less than 4% phosphoric acid and not less than 2% potassium, and percentage of nitrogen required to provide not less than 1 lb. of actual nitrogen per 1,000 sq. ft. of lawn area. Provide nitrogen in a form that will be available to lawn during initial period of growth.

CONFIDENTIAL

3. Conform to applicable State laws. Deliver in unopened containers bearing manufacturer's guaranteed analysis. Caked or otherwise damaged fertilizer not acceptable.

4. Mulching Material: Oat or wheat straw, reasonably free from weeds, foreign matter detrimental to plant life, and in dry condition. Apply 80 to 100 lbs/1,000 sq. ft. or equal 1" min. thickness so soil is still visible.

5. Lime: Ground dolomitic limestone not less than 85% total carbonates and magnesium ground so that 50% passes 100 mesh sieve and 90% the 20 mesh sieve.

PART 3 – EXECUTION

3.01 EXAMINATION

A. Verification of Conditions: Examine conditions under which earthwork is to be accomplished in coordination with Installer of materials and components specified in this Section and notify affected Prime Contractors and Engineer in writing of any conditions detrimental to proper and timely accomplishment. Do not proceed with earthwork until unsatisfactory conditions have been corrected in manner acceptable to Installer.

1. When Installer confirms conditions as acceptable to ensure proper and timely installation and to ensure requirements for applicable warranty or guarantee can be satisfied, submit to Architect written confirmation from applicable Installer. Failure to submit written confirmation and subsequent installation will be assumed to indicate conditions are acceptable to Installer.

3.02 PREPARATION

A. Protection

1. Use of Explosives: Do not bring explosives onto site.

2. Protection of Persons and Property

a. Barricade open excavations and post with warning lights for safety of persons. Operate warning lights during hours from dusk to dawn each day.

b. Protect structures, utilities, sidewalks, pavements, and other facilities immediately adjacent to excavations, from damage caused by settlement, lateral movement, undermining, washout, and other hazards.

c. Take precautions and provide necessary bracing and shoring to guard against movement or settlement of existing improvements or new construction. Contractor remains entirely responsible for strength and adequacy of bracing and shoring, and for safety and support of construction from damage or injury caused by lack of adequate protection or by movement or settlement.

3. Cold Weather Protection: Protect excavation bottoms against freezing when atmospheric temperature is less than 35°F. by covering with dry insulating materials of sufficient depth to prevent frost penetration.

CONFIDENTIAL

3.03 INSTALLATION

A. Excavation: Remove and dispose of all materials encountered to obtain required subgrade elevations. Remove from property and legally dispose of all excess fill material

1. Earth Excavation: Consists of removal and disposal of materials indicated in data provided on sub-surface conditions or materials encountered which are not classified as rock excavation or unauthorized excavation.

a. Refer to SECTION 02200 - Site Preparation for removal of pavement and other obstructions visible on ground surface, and for underground structures and utilities indicated to be demolished and removed.

2. Unauthorized Excavation: Consists of removal of materials beyond indicated subgrade elevations or side dimensions without the specific direction of the Architect. Replace unauthorized excavation as herein specified.

a. Under footings, foundation bases, or retaining walls, fill unauthorized excavation by extending indicated bottom elevation of footing or base to excavation bottom, without altering required top elevation.

b. Elsewhere, backfill and compact unauthorized excavations as specified for authorized excavations of same classification, unless otherwise directed by Architect.

3. Stability of Sides

a. Slope sides of excavations over 5 ft. deep to angle of repose of material excavated; otherwise, shore and brace where sloping not possible because of space restrictions or stability of material excavated.

b. Maintain sides and slopes of excavations in a safe condition until completion of backfilling, by scalping, benching, shelving or bracing.

c. Take precautions to prevent slides or cave-ins when excavations are made in locations adjacent to backfilled excavations, and when sides of excavations are subjected to vibrations from vehicular traffic or operation of machinery, or any other source. Refer to "Protection of Persons and Property" in "Preparation" above in Part 3 - Execution.

4. Shoring and Bracing:

a. Provide materials for shoring and bracing, such as sheet piling, uprights, stringers and cross-braces, in good serviceable condition. Use timbers that are sound and free of large or loose knots.

b. Maintain shoring and bracing in excavations regardless of time period excavations will be open. Carry down shoring and bracing as excavation progresses.

CONFIDENTIAL

c. Provide trench shoring and bracing to comply with ANSI A10.1 "Safety Code for Building Construction", OSHA, codes and authorities having jurisdiction and State Department of Labor.

d. Refer to Section 01120 Alteration Project Procedures for additional requirements.

5. Dewatering

a. Refer to subsurface logs included in Project Manual for information regarding subsurface conditions. Owner shall not be liable for Change Order resulting from Contractor's inability to properly dewater Site.

b. Perform excavation in manner to prevent surface water and subsurface or ground water from flowing into excavations, and to prevent water from flooding Project Site and surrounding area.

c. Do not allow water to accumulate in excavations. Remove water from excavations using dewatering methods that prevent softening of foundation bottoms, undercutting footings, and soil change detrimental to stability of subgrades and foundations. Provide and maintain pumps, sumps, suction and discharge lines, and other dewatering system components necessary to convey water away from excavations.

d. Convey water removed from excavations and rainwater to collecting or run-off areas. Provide and maintain temporary drainage ditches and other diversions outside excavation limits for each structure. Do not use trench excavations for site utilities as temporary drainage ditches. Do not direct water onto construction of another contractor.

6. Material Storage:

a. Stockpile excavated materials classified as satisfactory soil material where directed, until required for backfill or fill. Place, grade, and shape stockpiles for proper drainage.

b. Locate and retain materials required sufficient distance from edge of excavations, even though such excavations may be sheeted and braced, to prevent such material falling or sliding into excavations and to prevent cave-ins.

7. Excavation for Structures:

a. Conform to elevations and dimensions shown on Drawings, and extending sufficient distance from footings and foundations to permit placing and removal of concrete form work, installation of services, and for other construction required, and for inspection.

b. In excavating for footings and foundations, take care not to disturb bottom of excavation. Excavate by hand to final grade immediately before concrete is placed. Trim bottoms to required lines and grades to leave solid base to receive concrete.

8. Excavation for Pavements: Cut ground under pavements to comply with cross-sections, elevations and grades as shown.

9. Excavation for Ditches: Cut ditches to cross-sections and grades as shown. Deposit excavated materials sufficient distance from edge of ditches to prevent cave-ins or material falling or sliding

CONFIDENTIAL

into ditch. Keep ditches free of leaves, sticks, and other debris until final acceptance of construction.

10. Removal of Unsuitable Soil Materials:

    a. The identification of soil above and beyond amounts previously indicated on the Contract Documents considered to be unsuitable, including the extent of such soils, will be determined by the Owner's Geotechnical Engineer.

    b. Excavate unsuitable soil materials encountered that extend below required elevations, to additional depth directed by Architect, based on the Owner's Geotechnical Engineer recommendations.

    c. Measure additional excavation above and beyond amounts previously indicated on the Contract Documents as directed by the Architect and paid for by the Owner as a Change Order.

    d. Where removal of unsuitable soil materials is due to fault or negligence of Contractor in performance of shoring and bracing, dewatering, material storage, or other specified requirements, excavate resulting unsuitable soil material and replace with suitable soil material at no additional cost to Owner.

11. Removal of Existing Underground Utilities:

    a. Demolish and completely remove from site portions of existing underground utilities indicated to be removed.

    b. Coordinate with other Prime Contractor or with local utility companies, as applicable, for shutoff service if lines are active.

    c. Coordinate scheduling of removal to accommodate relocation of lines when necessary.

    d. Demolish and remove or relocate additional uncharted underground utilities conflicting with construction operations as directed by Architect. Measure additional removal and relocations as directed by Architect and paid for by Owner as Change Order.

12. Soil Erosion and Sediment Control:

    a. Soil Erosion and Sediment Control (SESC) Plan: Comply with Requirements of Section 02150 Erosion, Sediment, Pollution Control.

B. Fill and Backfill

1. Definitions:

    a. Fill: Placement of specified fill materials, in layers, over ground surface to required elevations, for each area classification listed below.
    b. Backfill: Placement of specified backfill material, in layers, in excavations to required subgrade elevations, for each area classification listed below.

CONFIDENTIAL

2. Fill and Backfill Materials: In all excavations, or filled areas, unless otherwise noted, use following fill types.

   a. Under Concrete Slabs Inside Building:

      1) Type 1 fill from subgrade to within 6" of slab.
      2) Type 4 fill for next 6".
      3) Provide vapor retarder as indicated on Drawings.

   b. Against Dampproofed or Waterproofed Structure Faces or Structure Faces with Foundation Drains: Type 1 fill.

   c. Under Concrete Steps, Concrete Pads, Concrete Sidewalks or Concrete Paving: Type 1fill from existing subgrade to within 6" of concrete, Type 2 fill for top 6", unless otherwise indicated.

   d. Under Asphalt Concrete Paving: Type 1 fill from existing subgrade to bottom of aggregate base.

3. Prior to Backfill Placement: Backfill excavations as promptly as construction permits, but not until completion of following:

   a. Acceptance by Architect of construction below finish grade including, where applicable, dampproofing, waterproofing, and perimeter insulation.

   b. Inspection, testing, approval and recording locations of underground utilities.

   c. Removal of concrete formwork.

   d. Removal of shoring and bracing, and backfilling of voids with satisfactory materials. Cut off temporary sheet piling driven below bottom of structures and remove in manner to prevent settlement of the structure or utilities, or leave in place if required.

   e. Removal of trash and debris.

   f. Permanent or temporary horizontal bracing is in place on horizontally supported walls.

   g. Acceptance by Architect of suitability of existing subgrade soil materials and compaction to receive backfill.

4. Preparation of Ground Surface to Receive Fill:

   a. Remove vegetation, debris, unsuitable soil materials, obstructions and deleterious materials from ground surface prior to placement of fills.

   b. After topsoil is stripped, proof roll Site with a ten ton vibratory compactor (minimum six overlapping passes required) or similar equipment. Excavate soft or loose soils identified during rolling and replace with properly compacted Type 1 fill as directed by Architect. Measure additional excavation and backfill as directed by Architect and paid for by Owner as Change Order.

CONFIDENTIAL

c. Plow, strip, or break up sloped surfaces steeper than 1 vertical to 4 horizontal so that fill materials bond with existing surface.

5. Placement and Compaction:

a. Place backfill and fill materials in layers not more than 8" in loose depth. Before compaction, moisten or aerate each layer as necessary to provide optimum moisture content of soil material. Do not place backfill or fill material on muddy or frozen surfaces or surfaces containing frost or ice.

b. Place backfill and fill materials evenly adjacent to structures, to required elevations. Take care to prevent wedging action of backfill against structures by carrying material uniformly around structure to approximately same elevation in each lift.

c. Use power-driven hand tampers for compacting materials adjacent to structures.

C. Compaction

1. Perform compaction of soil materials for backfills and fills using soil compaction equipment suitable for both materials compacted and construction area location.

2. Control soil compacting during construction for compliance with percentage of maximum density specified for each area classification.

3. Compaction Equipment:

a. Provide compaction equipment of suitable size and number, and in satisfactory working condition to complete construction on schedule.

b. Use sheepsfoot rollers, pneumatic tired rollers, tamper rollers, vibrating tampers, or other compaction equipment capable of obtaining required density throughout entire layer being compacted.

4. Percentage of Maximum Density Requirements: Provide not less than following percentages of maximum density of same soil material compacted at +/-2% of optimum moisture content, as measured against modified proctor laboratory compaction test ASTM D 1557-91.

a. Building Slabs and Steps: Compact subgrade. Compact each layer of backfill or fill material to at least 95% of maximum dry density.
b. Walkways: Compact subgrade. Compact each layer of backfill or fill material to at least 95% of maximum dry density.
c. Pavements: Compact subgrade. Compact each layer of backfill or fill material to at least 95% of maximum dry density.
d. Grass or Planted Areas: Compact top 2'-0" to a maximum of 85% maximum dry density and compact all beneath the upper 2'-0" to at least 95% of maximum dry density.

5. Moisture Control:

CONFIDENTIAL

a. Provide equipment capable of adding measured amounts of moisture to soil material as determined by moisture density tests. Maintain actual moisture content in soil material at time of compaction to +-2% of optimum moisture content as measured against modified Proctor Laboratory compaction test ASTM D1557-91.

b. Where subgrade or layer of soil material must be moisture conditioned before compaction, uniformly apply required amount of water to surface of subgrade, or layer of soil material manner to prevent free water appearing on surface during or subsequent to compaction operations.

c. Remove and replace, or scarify and air dry, soil material too wet to permit compaction to specified percentage of maximum density.

D. Grading: Uniformly grade all areas within limits of grading under this section, including adjacent transition areas. Smooth finished surface within specified tolerances, compact and with uniform levels or slopes between points where elevations are shown, or between such points and existing grades.

1. Topsoil Excavation:

a. Excavate topsoil from areas indicated and stockpile on site where indicated.
b. Do not excavate wet topsoil.
c. Stockpile topsoil to maximum 8'-0" depth, cover to protect from erosion.

2. Grading Outside Building Lines:

a. Grade areas outside building lines for each structure to drain away from structures and to prevent ponding of water. Finish surfaces free from irregular surface changes, large stones, and other objectionable material and as follows:

1) Grassed Areas: Finish areas to receive topsoil to within not more than 0.10 ft. above or below required subgrade elevations.

2) Screened Topsoil: Spread evenly, compact, and grade to 6 "minimum depth over all areas where natural grade has been disturbed by construction in this contract, except paved areas.

(a) Incorporate organic material by mixing with the topsoil in the screener prior to spreading topsoil or by spreading on the surface of the topsoil in place and incorporating to 4" minimum depth.

(b) Incorporate amendments to adjust pH as required by tilling into topsoil to a 4" minimum depth.

3) Pavements: Shape surface of areas under pavement to line, grade and cross-section, with finish surface not more than 1/2" above or below required subgrade elevation.

b. Hand grade areas adjacent to existing or newly constructed structures.

3. Grading Surface of Fill under Building Slabs: Grade surface of fill under building slabs smooth and even, free of voids, compacted as specified, and to required elevations.

CONFIDENTIAL

4. Compaction: After grading, compact subgrade surfaces to depth and percentage of maximum density for each area classification.

E. Seeding

1. Recondition and seed all areas disturbed or damaged as a result of construction in this Contract, including construction of other Prime Contractors, regardless of location, inside or outside, of contract limit line. Do not seed areas designated as roads.

   a. Create a neat continuous line separating the existing lawn and new lawn area. Grade of new lawn area is to be flush with the existing grade. Recondition, seed and mulch fully up to line separating new and existing lawn.

2. Immediately upon completion of rough and finish grading, provide additional topsoil, scarify, rake (to remove stones, stumps, roots and other objects over 1-1/2" in diameter), seed, mulch, bed, and sow seeding as follows:

   a. Loosen subgrade of lawn areas to minimum depth of 4". Remove stones over 1-1/2" in any dimension and sticks, roots, rubbish and other extraneous matter. Limit preparation to areas to be planted promptly after preparation.

   b. Spread top soil mixture to minimum depth required to meet lines shown, after light rolling and natural settlement.

   c. After screened top soil has been placed, rake to true lines. Remove all objectionable material.

   d. Moisten prepared lawn areas before planting if soil is dry. Water thoroughly and allow surface moisture to dry before planting lawns. Do not create muddy soil condition.

   e. Do not use wet or moldy seed or seed otherwise damaged in transit or storage.

   f. Fertilize at following rate worked lightly into top 3" of prepared topsoil:

      1) Actual Nitrogen: ... 2 pounds/1000 SF
      2) Phosphorus:..... 1/2 pound/1000 SF
      3) Potash: ..... 1/2 pound/1000 SF

   g. Sow 6 lbs. per 1,000 sq. ft. with mechanical spreaders in 3 passes, second pass 90 degrees to first pass, third pass 45 degrees to second pass. Spread at rate of each pass 2 lbs./1,000 SF. Incorporate seed into upper 1" of prepared soil using mechanical spreaders. Rake seed into soil, roll with 200 lb. roller and water with fine spray.

   h. Conduct seeding between August 15 and September 15. Seed during unseasonable conditions at Contractor's sole risk.

   i. Seed and plant all areas at earliest possible date to achieve mature grasses and stable plants prior to Owner occupancy.

CONFIDENTIAL

3. Apply water (for minimum period of 7 days), and compact (roll) mulch at least once per day during this period.

4. Acceptance of Lawns: Complete minimum of (3) mowings by Contractor before review for acceptance.

5. Reconditioning Existing Lawns

   a. Recondition existing lawn areas damaged by contractor's operations including storage of materials and equipment and movement of vehicles. Also recondition existing lawn areas where minor regrading is required.

   b. Provide fertilizer, seed or sod, and soil amendments as specified for new lawns and as required to provide a satisfactorily reconditioned lawn. Provide new topsoil as required to fill low spots and meet new finish grades.

   c. Cultivate bare and compacted areas thoroughly to provide a satisfactory, planting bed.

   d. Remove diseased and unsatisfactory lawn areas; do not bury into soil. Remove topsoil containing foreign materials resulting from Contractor's operations including oil drippings, stone, gravel and other loose building materials.

   e. Where substantial lawn remains (but is thin), mow, rake, aerate if compacted, fill low spots, remove humps and cultivate soil, fertilize, and seed. Remove weeds before seeding or if extensive, apply selective chemical weed killers as required. Apply seedbed mulch, if required, to maintain moist condition.

   f. Water newly planted areas and keep moist until new grass is established.

3.04 FIELD QUALITY CONTROL

A. Tests: Owner may provide soil testing and inspection service for quality control testing during earthwork operations. Owner reserves right to test and approve all subgrades and fill layers before construction proceeds. Refer to SECTION 01400 for additional requirements relating to testing.

1. Allow sufficient time and provide adequate notice to Owner's representative to allow testing of subgrades and fill layers.

2. Tests of subgrades and fill layers may, at Owner's option, include:

   a. Observation of proof rolling procedures.

   b. Observation/inspection of unsuitable soil removal.

   c. Paved Areas Subgrade:

CONFIDENTIAL

1) At least 1field density test of subgrade for every 2000 sq. ft. of paved area or building slab, but not less than 3 tests, may be made.
2) In each compacted fill layer, 1 field density test for every 2000 sq. ft. of overlaying building slab or paved area, but not less than 3 tests, may be made.

d. Foundation Wall Backfill: Field density test at locations and elevations as directed may be made. At least 1 test may be made for every 50 feet of wall.

e. Fill under Footings: In each compacted fill layer, 1 compaction test for every 30 linear feet of wall may be taken. 1 compaction test may be made under each individual footing.

3. If, in the opinion of Engineer and based on reports of testing service and inspection, completed subgrade or fills are below specified density, provide additional compaction and testing at no additional expense to Owner.

3.05 ADJUSTING / CLEANING

A. Disposal of Excess and Waste Materials

1. Removal from Owner's Property: Remove all excess excavated material, subsoil, trash and debris from Owner's property and legally dispose of it.

3.06 PROTECTION

A. Protection of Graded Areas

1. Protect newly graded and seeded areas from traffic, erosion and keep free of trash and debris.
2. Repair and re-establish grades and seeding in settled, eroded and rutted areas to specified tolerances.

B. Reconditioning Compacted Areas: Where completed compacted areas are disturbed by subsequent construction operations or adverse weather, scarify surface, reshape, and compact to required density prior to further construction. Use hand tamping for recompaction over underground utilities and underfloor subdrains, if any.

C. Seeded Lawns:

1. Water to ensure uniform seed germination and to keep surface of soil damp. Continue watering new seeding until acceptance by Owner.
2. Apply water slowly so that surface of soil will not puddle and crust.
3. Cut grass first time when it reaches height of 2-1/2" and maintain to minimum height of 2". Do not cut more than 1/3 of blade at any one mowing. Remove clippings.
4. After first mowing water grass sufficiently to moisten soil from 3" to 5" deep.
5. Apply herbicide, if approved by Owner, when weeds start developing, during calm weather when air temperature is above 50°F. (Herbicide to be applied by a licensed applicator).
6. Replant damaged grass areas showing root growth failure, deterioration, bare or thin spots, and eroded areas.

END OF SECTION 02300

CONFIDENTIAL

SECTION 02324

TRENCHING

PART 1 GENERAL

1.1 SUMMARY

A. Section Includes:
   1. Excavating trenches for utility lines.
   2. Compacted fill from top of utility bedding to subgrade elevations.
   3. Backfilling and compaction.

B. Related Sections:
   1. Section 02300 - Earthwork
   2. Section 03300 - Cast-in-Place Concrete: Concrete materials.

1.2 REFERENCES

A. ASTM International:
   1. ASTM C136 - Standard Test Method for Sieve Analysis of Fine and Coarse Aggregates.
   2. ASTM D698 - Standard Test Method for Laboratory Compaction Characteristics of Soil Using Standard Effort (12,400 ft-lbf/ft3 (600 kN-m/m3)).
   3. ASTM D2922 - Standard Test Method for Density of Soil and Soil-Aggregate in Place by Nuclear Methods (Shallow Depth).
   4. ASTM D3017 - Standard Test Method for Water Content of Soil and Rock in Place by Nuclear Methods (Shallow Depth).

B. New York State Department of Transportation 2006 Standard Specifications.

1.3 DEFINITIONS

A. Utility: Any buried pipe, duct, conduit, or cable.

B. Unauthorized Excavation: any excavation beyond the lines and grades indicated on the drawings made by mistake, carelessness, or at the Contractor's option. Loose soil disturbed by the teeth of the excavator below the required Subgrade is defined as unauthorized excavation.

C. Authorized Excavation: excavation to the lines and grades indicated on the drawings and also test pits, removing unsuitable material, locating utilities or other uses when directed by the Engineer.

1.4 SUBMITTALS

A. Section 01330 - Submittal Procedures: Requirements for submittals.

CONFIDENTIAL

B. Submit samples, names of suppliers and certifications for fill materials in accordance with Section 02300 Earthwork.

1.5 QUALITY ASSURANCE

A. Perform Work in accordance with New York State Department of Transportation 2006 Standard Specifications.

1.6 FIELD MEASUREMENTS

A. Verify field measurements prior to installation.

1.7 COORDINATION

A. Section 01300 - Administrative Requirements: Coordination and project conditions.

B. Verify Work associated with lower elevation utilities is complete before placing higher elevation utilities.

PART 2 PRODUCTS

2.1 FILL MATERIALS

A. Refer to Section 02300 -- Earthwork..

PART 3 EXECUTION

3.1 LINES AND GRADES

A. Lay pipes to lines and grades indicated on Drawings.
1. Engineer or Owner reserve right to make changes in lines, grades, and depths of utilities when changes are required for Project conditions.

B. Use laser-beam instrument with qualified operator to establish lines and grades.

3.2 PREPARATION

A. Call NY Dig Safely (UFPO) at 1-800-962-7962 not less than three working days before performing Work.
1. Request underground utilities to be located and marked within and surrounding construction areas.

B. Identify required lines, levels, contours, and datum locations.

C. Protect plant life, lawns, structures and other features outside the limit of disturbance.

D. Protect bench marks.

CONFIDENTIAL

E. Maintain and protect above and below grade utilities indicated to remain.

F. Establish temporary traffic control in accordance with Section 01500 Temporary Facilities and Controls.

3.3 TRENCHING

A. Excavate for utilities to the required lines and grades. All excavation is unclassified and no additional payment will be made regardless of the materials that are encountered.

B. Do not advance open trench more than 100-feet ahead of installed pipe.

C. Cut trenches to width indicated on Drawings. Remove water or materials that interfere with Work.

D. Excavate trenches to depth indicated on Drawings. Provide uniform and continuous bearing and support for bedding material and pipe.

E. Do not interfere with 45 degree bearing splay of foundations.

F. Provide sheeting and shoring to protect excavation as specified in this section.

G. When subsurface materials at bottom of trench are soft, contact Engineer immediately and follow Engineer's direction for over excavation and backfill.

H. Cut out soft areas of subgrade not capable of compaction in place. Coordinate with Engineer on limits to remove and material to be backfilled with.

I. Trim excavation. Remove loose matter.

J. Remove excess subsoil not intended for reuse, from site.

3.4 TEMPORARY SUPPORT FOR UTILITY POLES

A. Provide temporary support for utility poles where nearby trenching could cause settlement or instability. The decision to provide temporary support and the means and methods of providing support is the responsibility of the Contractor. Consider all factors such as soil conditions, depth of trench, ground water, distance from the pole to the trench, slope of the earth, arrangement of suspended wires, guys, plumbness of the pole, etc.

B. Consult with the Owner of the poles and comply with applicable recommendations or regulations.

C. Temporary support may be provided by the utility company or by the Contractor. Reimburse the utility company for all costs associated with temporary support.

CONFIDENTIAL

3.5 SHEETING AND SHORING

A. Sheet, shore, and brace excavations to prevent danger to persons, structures and adjacent properties and to prevent caving, erosion, and loss of surrounding subsoil.

B. Design sheeting and shoring to be removed at completion of excavation work.

C. Repair damage caused by failure of the sheeting, shoring, or bracing and for settlement of filled excavations or adjacent soil.

D. Repair damage to new and existing Work from settlement, water or earth pressure or other causes resulting from inadequate sheeting, shoring, or bracing.

3.6 BACKFILLING

A. Backfill trenches to contours and elevations with unfrozen fill materials.

B. Systematically backfill to allow maximum time for natural settlement. Do not backfill over porous, wet, frozen, or spongy subgrade surfaces.

C. Place fill material in continuous layers and compact in accordance with the details on the drawings.

D. Employ placement method that does not disturb or damage, utilities in trench.

E. Maintain optimum moisture content of fill materials to attain required compacted density.

F. Do not leave trench open at end of working day, unless directed or otherwise permitted.

G. Protect open trench to prevent danger to the public.

3.7 TOLERANCES

A. Section 01400 - Quality Requirements: Tolerances.

B. Top surface of general backfilling: Plus or minus 1-inch from required elevations.

3.8 FIELD QUALITY CONTROL

A. Section 01400 - Quality Requirements: Testing and inspection services .

B. Perform laboratory material tests in accordance with ASTM D698.

C. Perform in place density tests in accordance with the following:
   1. Density Tests: ASTM D2922.
   2. Moisture Tests: ASTM D3017.

D. When tests indicate Work does not meet specified requirements, remove Work, replace, compact, and retest.

CONFIDENTIAL

E. Frequency of Tests: two per 1,000 feet of pipe.

3.9 PROTECTION OF FINISHED WORK

A. Section 01700 - Execution Requirements: Protecting finished work.

B. Reshape and re-compact fills subjected to vehicular traffic during construction.

END OF SECTION

CONFIDENTIAL

SECTION 02535

PRESSURE SEWER

PART 1 GENERAL

1.1 SUMMARY

A. Section Includes:
   1. Sanitary sewer low pressure pipelines.
   2. Service connections.
   3. Bedding and cover materials.

B. Related Sections:
   1. Section 02324 - Trenching.
   2. Section 02952 - Sewer and Manhole Testing.

1.2 REFERENCES

A. ASTM International:
   1. ASTM D2241 - Standard Specification for Poly (Vinyl Chloride) (PVC) Pressure-Rated Pipe (SDR Series).
   2. ASTM D2321 - Standard Practice for Underground Installation of Thermoplastic Pipe for Sewers and Other Gravity-Flow Applications.
   3. ASTM D3139 - Standard Specification for Joints for Plastic Pressure Pipes Using Flexible Elastomeric Seals.
   4. ASTM F477 - Standard Specification for Elastomeric Seals (Gaskets) for Joining Plastic Pipe.

1.3 SUBMITTALS

A. Section 01330 - Submittal Procedures.

B. Product Data: Submit data indicating pipe material used, pipe accessories, and valves.

C. Manufacturer's Installation Instructions: Indicate special procedures required to install Products specified.

D. Manufacturer's Certificate: Certify Products meet or exceed specified requirements.

1.4 CLOSEOUT SUBMITTALS

A. Section 01700 - Execution Requirements.

B. Project Record Documents: Record location of pipe runs, connections, valves, and invert elevations.

CONFIDENTIAL

C. Identify and describe unexpected variations to subsoil conditions or discovery of uncharted utilities.

1.5 DELIVERY, STORAGE, AND HANDLING

A. Section 01600 - Product Requirements.

B. Do not place materials on private property without written permission of property owner.

C. During loading, transporting and unloading, exercise care to prevent damage to materials.

D. Do not drop pipe, fittings, or valves.

E. Avoid shock or damage to pipe.

F. Do not stack pipe higher than recommended by pipe manufacturer.

1.6 FIELD MEASUREMENTS

A. Verify field measurements and elevations are as indicated.

1.7 COORDINATION

A. Section 01300 - Administrative Requirements.

B. Coordinate the location of connection to the sewer main in accordance with the requirements of Section 02539 Sanitary Sewer.

PART 2 PRODUCTS

2.1 PVC PIPE

A. Pipe: ASTM D2241, SDR21.

B. Flexible Elastomeric Seals: ASTM D3139.

C. Seal Material: ASTM F477.

D. Fittings: Molded Push-On Joint per ASTM 03139.

2.2 CHECK VALVES

A. Bronze body, swing check valves, 125 lb pattern, threaded ends. Provide adapters to the adjacent piping.

2.3 UNDERGROUND PIPE MARKERS

A. Furnish tape as specified in Section 02539 Sanitary Sewer.

CONFIDENTIAL

2.4 BEDDING AND COVER MATERIALS

A. Provide bedding and cover materials as specified in Sections 02539 Sanitary Sewer and 02324 Trenching.

2.5 CONCRETE

A. Concrete in accordance with Section 03300.

PART 3 EXECUTION

3.1 PREPARATION

A. Excavate pipe trench in accordance with Section 02324.

3.2 INSTALLATION - PIPE

A. Install pipe, fittings, and accessories in accordance with ASTM D2321 Seal joints watertight.

B. Lay pipe on uniform grades without intermediate high or low points.

C. Install bedding at sides and over top of pipe to minimum compacted thickness of 12 inches.

D. Refer to Section 02324 for backfilling and compacting requirements. Do not displace or damage pipe when compacting.

E. Install detectable underground utility marking tape continuous over top of pipe buried 12 inches above pipe line; coordinate with Section 02324.

3.3 FIELD QUALITY CONTROL

A. Section 01400 - Quality Requirements.

B. Pressure Test: Test in accordance with Section 02952.

3.4 PROTECTION OF FINISHED WORK

A. Section 01700 - Execution Requirements.

B. Protect pipe and aggregate cover from damage or displacement until backfilling operation is in progress.

END OF SECTION

CONFIDENTIAL

SECTION 02539
SANITARY SEWER

PART 1 GENERAL

1.1 SUMMARY

A. Section Includes:
1. Sanitary sewer pipe and fittings.
2. Underground pipe markers.
3. Connection to manholes.
4. Wye branches and tees.
5. Sanitary Laterals
6. Bedding and cover materials.
7. Modular precast concrete manholes with tongue-and-groove joints, and frames and covers.

B. Related Sections:
1. Section 02300 - Earthwork.
2. Section 02324 – Trenching.
3. Section 02952 – Testing.
4. Section 03300 - Concrete.

1.2 REFERENCES

A. ASTM International:
1. ASTM A48/A48M - Standard Specification for Gray Iron Castings.
2. ASTM C39/C39M - Standard Test Method for Compressive Strength of Cylindrical Concrete Specimens.
3. ASTM C478 - Standard Specification for Precast Reinforced Concrete Manhole Sections.
4. ASTM C497 - Standard Test Methods for Concrete Pipe, Manhole Sections, or Tile.
5. ASTM A746 - Standard Specification for Ductile Iron Gravity Sewer Pipe.
6. ASTM C913 - Standard Specification for Precast Concrete Water and Wastewater Structures.
7. ASTM C923 - Standard Specification for Resilient Connectors Between Reinforced Concrete Manhole Structures, Pipes and Laterals.
8. ASTM D2321 - Standard Practice for Underground Installation of Thermoplastic Pipe for Sewers and Other Gravity-Flow Applications.
9. ASTM D2729 - Standard Specification for Poly (Vinyl Chloride) (PVC) Sewer Pipe and Fittings.
10. ASTM D3034 - Standard Specification for Type PSM Poly (Vinyl Chloride) (PVC) Sewer Pipe and Fittings.
11. ASTM F477 - Standard Specification for Elastomeric Seals (Gaskets) for Joining Plastic Pipe.

B. American Water Works Association:

CONFIDENTIAL

1. AWWA C104 - American National Standard for Cement-Mortar Lining for Ductile-Iron Pipe and Fittings for Water.
2. AWWA C110 - American National Standard for Ductile-Iron and Grey-Iron Fittings, 3 in. through 48 in. (75 mm through 1200 mm), for Water and Other Liquids.
3. AWWA C111 - American National Standard for Rubber-Gasket Joints for Ductile-Iron Pressure Pipe and Fittings.
4. AWWA C150 - ANSI Standard for the Thickness Design of Ductile Iron Pipe.
5. AWWA C151 - American National Standard for Ductile-Iron Pipe, Centrifugally Cast, for Water.
6. AWWA C153 - American National Standard for Ductile-Iron Compact Fittings for Water Service.

1.3 SUBMITTALS

A. Section 01330 - Submittal Procedures: Requirements for submittals.

B. Shop Drawings: Show size, materials, components of system, typical details of construction for precast manhole sections.

C. Product Data: Submit catalog cuts and other pertinent data indicating proposed materials, accessories, details, and construction information
   1. Submit manhole frames and covers, component construction, features, configuration, and dimensions.

D. Submit reports indicating field tests made and results obtained.

E. Manufacturer's Installation Instructions:
   1. Indicate special procedures required to install Products specified.

F. Manufacturer's Certificate: Certify products meet or exceed specified requirements.

1.4 CLOSEOUT SUBMITTALS

A. Section 01700 - Execution Requirements: Requirements for submittals.

B. Project Record Documents: Record location of pipe runs, connections, manholes, laterals, cleanouts, and invert elevations.

C. Identify and describe unexpected variations to subsoil conditions or discovery of uncharted utilities.

1.5 QUALIFICATIONS

A. Manufacturer: Company specializing in manufacturing Products specified in this section with minimum three years experience.

CONFIDENTIAL

1.6 DELIVERY, STORAGE, AND HANDLING

A. Section 01600 - Product Requirements: Requirements for transporting, handling, storing, and protecting products.

B. Block individual and stockpiled pipe lengths to prevent moving.

C. Comply with precast concrete manufacturer's instructions and ASTM C913 for unloading, storing and moving precast manholes.

D. Store precast concrete manholes to prevent damage to Owner's property or other public or private property. Repair property damaged from materials storage.

E. Mark each precast structure by indentation or waterproof paint showing date of manufacture, manufacturer, and identifying symbols and numbers shown on Drawings to indicate its intended use.

1.7 FIELD MEASUREMENTS

A. Verify field measurements and elevations are as indicated.

1.8 COORDINATION

A. Section 01300 - Administrative Requirements: Requirements for coordination.

B. Notify any affected utility companies minimum of 72-hours prior to construction.

PART 2 PRODUCTS

2.1 SANITARY SEWER PIPE AND FITTINGS

A. Forcemain - Ductile Iron Pipe: AWWA C150, AWWA C151, Class 52, bell and spigot ends.
   1. Manufacturers:
      a. U.S. Pipe - Tyton Joint Pipe.
      b. Griffin Pipe.
      c. American Cast Iron.
      d. Or Approved Equal
   2. Outside Coating: AWWA C151, asphaltic coating, 1 mil uniform thickness.
   3. Lining: Cement mortar lined in accordance with AWWA C104.

B. Gravity - Plastic Pipe: ASTM D3034, Type PSM, Poly Vinyl Chloride (PVC) material SDR 35; size as shown on the Drawings, bell and spigot style rubber ring sealed gasket joint.
   1. Fittings: PVC.
   2. Joints: ASTM F477, elastomeric gaskets.

C. Couplings:

CONFIDENTIAL

1. Fernco Series 1056.
2. Uni-Seal Pipe connectors.
3. Or Approved Equal

D. Flexible Coupling: Resilient chemical-resistant elastomeric coupling, two Series 300 stainless steel clamps and stainless steel screws and housings.

2.2 FLEXIBLE PIPE CONNECTIONS FOR MANHOLE PIPE ENTRANCES

A. Provide new connections integral with manholes as specified in Section 02082.

B. Couplings for cored connections to existing manholes: Resilient Chemical – resistant elastometric coupling with 300 series stainless steel or non-metallic hardware.
1. Manufacturers:
   a. NPC – Kore-N-Seal
   b. PSX-Press-Bout
   c. Thunder Corporation – LMK Seal
   d. Or Approved Equal

2.3 CONCRETE ENCASEMENT AND CRADLES

A. Concrete: Conforming to Section 03300, 2,000 psi 28-day concrete, rough troweled finish.

2.4 UNDERGROUND PIPE MARKERS

A. Manufacturers:
1. Pollard Water
2. Presco
3. Tape Systems, Inc.
4. Or Approved Equal

B. Detectable Plastic Ribbon Tape: Bright green colored, continuously printed, detectable metallic type minimum 6 inches wide by 4 mil thick, manufactured for direct burial service.

2.5 MANHOLES

A. Manhole Sections and Grade Adjustment Rings: Reinforced precast concrete in accordance with ASTM C478 with gaskets in accordance with ASTM C923.
1. Joints for Precast Manholes: In accordance with ASTM C913.

2.6 FRAMES AND COVERS

A. Manufacturers:
1. Campbell Foundry Co. Model 1251
2. Neenah Foundry Co. Model R-1556
3. Or Approved Equal

CONFIDENTIAL

B. Product Description: ASTM A48/A48M, Class 30B AASHTO M306 Cast iron construction.
   1. Lid: Machined flat bearing surface, non-vertical, non-penetrating lift hole checkerboard cover design; live load rating of H-20, sealing gasket; cover molded with the words "SANITARY SEWER".

2.7 COMPONENTS

A. Manhole Steps: Formed reinforced polypropylene with concrete inserts.
   a. Minimum ½" grade 60 reinforcing bar.
   b. Co-polymer polypropylene plastic.
   c. 12" width, 5 ¾" projection from wall.
   d. Conforming to ASTM C478.

2.8 CONFIGURATION

A. Shaft Construction and Eccentric Cone Top Section: Reinforced precast Concrete pipe sections, lipped male/female joints, with cast-in gasket seals to receive pipe.
   1. Provide lifting points without through-wall penetrations.

B. Shape: Cylindrical.

C. Clear Inside Dimensions: 48 inch diameter, unless indicated otherwise on the drawings.

D. Design Depth: as indicated on Drawings.

E. Clear Cover Opening: as detailed on the drawings.

F. Pipe Entry: Furnish resilient.
   1. Manufacturers
      a. A-lok – 92 or 93 series as applicable
      b. Press Seal – Press Wedge
      c. Substitutions – Section 1600 – Product Requirements
      d. Chardon Rubber – Lock Joint
      e. Or Approved Equal

G. Structure Joint Gaskets: ASTM C361/Rubber or Butyl Rubber adhesive, conforming to ASTM C478.

H. Steps: 12-inches on center vertically, set into structure wall

2.9 ACCESSORIES

A. Grout: Specified in Section 03300.

CONFIDENTIAL

PART 3 EXECUTION

3.1 EXAMINATION

A. Section 01300 - Administrative Requirements: Verification of existing conditions before starting work.

B. Verify trench cut is ready to receive work and excavations, dimensions, and elevations are as indicated on drawings.

3.2 PREPARATION

A. Remove large stones or other hard matter capable of damaging pipe or impeding consistent backfilling or compaction.

B. Protect and support existing sewer lines, utilities and appurtenances.

C. Maintain profiles of utilities. Coordinate with other utilities to eliminate interference. Notify Engineer where crossing conflicts occur.

3.3 BEDDING

A. Excavate pipe trench in accordance with Section 02324-Trenching.

B. Excavate to lines and grades shown on Drawings or required to accommodate installation of encasement.

C. Dewater excavations to maintain dry conditions and preserve final grades at bottom of excavation.

D. Provide sheeting and shoring in accordance with Section 02324-Trenching.

3.4 INSTALLATION - PIPE

A. Install pipe, fittings, and accessories in accordance with ASTM D2321. Seal joints watertight.

B. Lay pipe to slope gradients noted on drawings. Begin at downstream end and progress upstream.

C. Assemble and handle pipe in accordance with manufacturer's instructions except as modified on the Drawings or by Engineer.

D. Keep pipe and fittings clean until work is completed and accepted by Engineer. Cap open ends during periods of work stoppage.

E. Lay bell and spigot pipe with bells upstream.

CONFIDENTIAL

F. Install plastic ribbon tape continuous buried 24-inches below finish grade, above pipe line.

3.5 INSTALLATION - CONNECTION TO EXISTING MANHOLE

A. Core drill existing manhole to clean opening. Use of pneumatic hammers, chipping guns, sledge hammers, or other destructive means is not permitted.

B. Install seal in accordance with the Manufacturers instructions..

C. Prevent construction debris from entering existing sewer line when making connection.

3.6 INSTALLATION - WYE BRANCHES AND TEES

A. Install wye branches or pipe tees at locations indicated on Drawings concurrent with pipe laying operations. Use standard fittings of same material and joint type as sewer main.

B. Maintain minimum 5-feet separation distance between wye connection and manhole.

C. Install laterals to the right-of-way or easement line as indicated on the Drawings.

3.7 INSTALLATION - SANITARY LATERALS

A. Install laterals at locations or as preferred by the property owner, as required in Paragraph 1.9.

B. Construct laterals from wye branch to terminal point as indicated on the Drawings.

C. Where depth of main pipeline warrants, construct riser type laterals from wye branch.

D. Maintain 4-feet minimum depth of cover over pipe.

E. Install watertight plug, braced to withstand pipeline test pressure thrust, at termination of lateral. Install temporary marker stake extending from end of lateral to 12-inches above finished grade. Paint top 6-inches of stake with fluorescent orange paint. Mark the stake with the invert elevation at the end of the lateral using a permanent marker.

3.8 BEDDING

A. Place bedding around sides and to 1-foot over the top of pipe with cover fill in minimum lifts of 6-inches, tamp in place. Place and compact material immediately adjacent to pipes to avoid damage to pipe and prevent pipe misalignment.

3.9 INSTALLATION – PRECAST CONCRETE UNITS

A. Excavation and Backfill:

CONFIDENTIAL

1. Excavate for manholes in accordance with Section 02324 in location and to depth shown. Provide clearance around sidewalls of manhole or structure for construction operations.
2. When groundwater is encountered, prevent accumulation of water in excavations. Place manholes or structures in dry trench.
3. Where possibility exists of watertight manhole becoming buoyant in flooded excavation, anchor manhole to avoid flotation.

B. Install manholes supported at proper grade and alignment on crushed stone bedding as shown on Drawings.

C. Backfill excavations for manholes in accordance with Section 02324.

D. Set cover frames and covers level without tipping, to correct elevations.

3.10 PRECAST CONCRETE MANHOLE INSTALLATION

A. Lift precast manholes at lifting points designated by manufacturer.

B. When lowering manholes into excavations and joining pipe to units, take precautions to ensure interior of pipeline and manhole or structure remains clean.

C. Set precast manholes bearing firmly and fully on crushed stone bedding, compacted in accordance with provisions of Section 02324.

D. Assemble multi-section manholes by lowering each section into excavation. Install joint sealer between precast sections in accordance with manufacturer's recommendations. Lower, set level, and firmly position base section before placing additional sections.

E. Remove foreign materials from joint surfaces and verify sealing materials are placed properly. Maintain alignment between sections by using guide devices affixed to lower section.

F. Install Joint sealing materials on site.

G. Verify manholes installed satisfy required alignment and grade.

H. Cut pipe to finish flush with interior of manhole.

I. Construct channel and benches inside the manhole base using cast-in place concrete as detailed on the drawings:
   1. Provide channels with smooth lines, grades and transitions. Use the entire manhole diameter to minimize horizontal curve radius. Provide vertical curves in the invert at vertical transitions.

3.11 SANITARY MANHOLE DROP CONNECTIONS

A. Construct drop connections into sanitary manholes in accordance with Drawings.

CONFIDENTIAL

3.12 CASTINGS INSTALLATION

A. Set frames using grade rings and joint sealer as specified for manhole sections as indicated on Drawings.

B. Set frame and cover 2-inches above finished grade for manholes and with covers located within unpaved areas to allow area to be graded away from cover beginning below top surface of frame.

3.13 FIELD QUALITY CONTROL

A. Section 01700 - Execution Requirements: Field inspecting, testing, adjusting, and balancing.

B. Pressure Test: Test in accordance with Section 02952.

C. Deflection Test: Test in accordance with Section 02952.

3.14 PROTECTION OF FINISHED WORK

A. Section 01700 - Execution Requirements: Requirements for protecting finished Work.

B. Protect pipe and aggregate cover from damage or displacement until backfilling operation is in progress.

END OF SECTION 02539

CONFIDENTIAL

SECTION 02952

PIPING SYSTEMS TESTING

PART 1 GENERAL

1.1 SUMMARY

A. Section Includes:
   1. Testing Gravity Sewer Piping:
      a. Low-pressure Air Test.
      b. Deflection Test.
   2. Testing Pressure Piping.
      a. Hydrostatic test for Ductile Iron and PVC Pipe
      b. Hydrostatic test for Polyethylene Pipe
         1) Initial test before connections are made.
         2) Final test after connections are made.
   3. Testing Manholes:
      a. Vacuum Test.

B. Related Sections:
   1. Section 02539 - Sanitary Sewer Systems
   2. Section 03470 – Precast Concrete Vaults

1.2 REFERENCES

A. ASTM International:
   1. ASTM C1244 - Standard Test Method for Concrete Sewer Manholes by the Negative Air Pressure (Vacuum) Test.
   2. ASTM D2122 - Test Method for Determining Dimensions of Thermoplastic Pipe and Fittings.
   3. ASTM F2164-02 Field Leak Testing of Polyethylene (PE) Pressure Piping Systems Using Hydrostatic Pressure.

B. AWWA
   1. AWWA Manual M55 – PE Design and Installation
   2. AWWA C600 – Installation of Ductile Iron Water Mains and their Appurtenances.
   3. AWWA C605 – Underground installation of Polyvinyl Chloride Pressure Piping and Fittings for Water.

1.3 SUBMITTALS

A. Section 01330 - Submittal Procedures: Requirements for submittals.

B. Submit the following prior to start of testing:
   1. Testing procedures.
   2. List of test equipment.

CONFIDENTIAL

3. Testing sequence schedule.
4. Provisions for disposal of flushing and test water.
5. Certification of test gauge calibration.
6. Deflection mandrel drawings and calculations.

C. Test Reports: Indicate results of tests.

PART 2 PRODUCTS

2.1 VACUUM TESTING EQUIPMENT

A. Vacuum pump.

B. Vacuum line.

C. Vacuum tester base with compression band seal and outlet port.

D. Shut-off valve.

E. Stop watch.

F. Plugs.

G. Vacuum gauge, calibrated to 0.1 inch Hg

2.2 AIR TEST EQUIPMENT

A. Air compressor.

B. Air supply line.

C. Shut-off valves.

D. Pressure regulator.

E. Pressure relief valve.

F. Stop watch.

G. Plugs.

H. Pressure gauge, such that the test pressure near the midpoint of the scale.

2.3 HYDROSTATIC TEST EQUIPMENT

A. Hydro pump.

B. Pressure hose.

CONFIDENTIAL

C. Water meter.

D. Test connections.

E. Pressure relief valve.

F. Pressure gauge, such that the test pressure near the midpoint of the scale.

2.4 DEFLECTION TEST EQUIPMENT

A. Go, No-Go mandrels.

B. Pull/retrieval ropes.

PART 3 EXECUTION

3.1 EXAMINATION

A. Section 01300 - Administrative Requirements: Verification of existing conditions before starting work.

B. Verify manholes and piping are ready for testing.

3.2 PREPARATION

A. Gravity Sewers
1. Backfill piping at least 2 feet above top of pipe, except outlets, wyes, and lateral ends to be plugged.
2. Lamping
   a. Lamp gravity piping after flushing and cleaning.
   b. Perform lamping operation by shining light at one end of each pipe section between manholes; observe light at other end; reject pipe not installed with uniform line and grade; remove and reinstall rejected pipe sections; re-clean and lamp until pipe section achieves uniform line and grade.
3. Pressure Test
   a. Plug outlets, wye-branches and laterals; brace plugs to resist test pressures.

B. Pressure Piping
1. Ensure that all pipe restraints are installed properly and that concrete thrust blocks have developed adequate strength before proceeding with testing.
2. For underground piping, adequately backfill piping to prevent movement during pressurization. Where required, or where directed, certain connections or joints shall be left uncovered to facilitate a visual leak inspection.
3. Take appropriate precautions to eliminate potential hazards caused by pipe failure.

C. Manholes

CONFIDENTIAL

1. Test complete manholes including grade adjustment rings and iron frames.
2. Plug pipe openings. Securely brace plugs.

3.3 FIELD QUALITY CONTROL

A. Section 01400 - Quality Requirements: Field inspecting, testing, adjusting, and balancing.

B. Testing Gravity Sewer Piping:

1. Low-pressure Air Test (applies to all piping materials):
   a. Test each section of gravity sewer piping between manholes.
   b. Where customer service connections are installed under the Contract, test connections and service lines concurrently with the main, unless directed otherwise by the Engineer.
   c. Introduce air pressure slowly to approximately 4 psig.
      1) Determine ground water elevation above spring line of pipe for every foot of ground water above spring line of pipe, increase starting air test pressure by 0.43 psig; do not increase pressure above 10 psig.
   d. Allow pressure to stabilize for at least five minutes. Adjust pressure to 3.5 psig or increased test pressure as determined above when ground water is present. Start test.
   e. Test:
      1) Determine test duration for sewer section with single pipe size from the following table. Do not make allowance for laterals.

AIR TEST TABLE

Minimum Test Time for Various Pipe Sizes

Nominal Pipe Size, Inches	T(time), min/ 100 feet
3	0.2
4	0.3
6	0.7
8	1.2
10	1.5
12	1.8
15	2.1
18	2.4
21	3.0
24	3.6
27	4.2
30	4.8
33	5.4
36	6.0

CONFIDENTIAL

2) Record drop in pressure during test period; when air pressure has dropped more than 1.0 psig during test period, piping has failed; when 1.0 psig air pressure drop has not occurred during test period, discontinue test and piping is accepted.
3) When piping fails, determine source of air leakage, make corrections and retest; test section in incremental stages until leaks are isolated; after leaks are repaired, retest entire section between manholes.

2. Deflection Test (Applies to Plastic Sewer Pipe):
   a. Perform vertical ring deflection testing after backfilling has been in place for at least 30 days but not longer than 12 months.
   b. Allowable maximum deflection for installed plastic sewer pipe limited to 5 percent of original vertical internal diameter.
   c. Perform deflection testing using properly sized rigid ball or 'Go, No-Go' mandrel.
   d. Furnish rigid ball or mandrel with diameter not less than 95 percent of base or average inside diameter of pipe as determined by ASTM standard to which pipe is manufactured. Measure pipe in compliance with ASTM D2122.
   e. Perform test without mechanical pulling devices.
   f. Locate, excavate, replace and retest pipe exceeding allowable deflection.

C. Testing Pressure Piping (Applies to Sanitary Sewer Force Mains and Water Mains):
1. General
   a. Hydrostatically test the entire pressure piping system. Sections of the system may be tested individually as installation proceeds, as permitted by the Engineer.
   b. Where significant changes in elevation occur, the system shall be tested in sections in order to provide appropriate test pressures to all sections of piping.
   c. Where service connections are a different material than the Main, the method specified for the Main shall govern.
2. Hydrostatic Leakage Test for Ductile Iron Pipe and PVC Pipe:
   a. Where customer service connections are installed under the Contract, test connections and service lines concurrently with the main unless directed otherwise by the Engineer.
   b. Hydrostatically test pressure piping, at a pressure between 1.25 and 1.5 times the design pressure depending on the elevation. Adjust readings of the test gauge according to the elevation of test gauge.
   c. Fill section to be tested with water slowly, expel air from piping at high points. Install corporation cocks at high points. Close air vents and corporation cocks after air is expelled and raise pressure to specified test pressure. Maintain the test pressure for 2 hours.
   d. Observe joints, fittings and valves under test. Remove and renew cracked pipe, joints, fittings, and valves showing visible leakage. Retest.
   e. Correct visible deficiencies and continue testing at same test pressure for additional 2 hours to determine leakage rate. Maintain pressure within

CONFIDENTIAL

plus or minus 5.0 psig of test pressure. Leakage is defined as quantity of water supplied to piping necessary to maintain test pressure during period of test.

f. Compute maximum allowable leakage by the following formula:

$$L = \frac{SD\sqrt{P}}{C}$$

L = allowable, in gallons per hour
S = length of pipe tested, in feet
D = nominal diameter of pipe, in inches
p = average test pressure during leakage test, in psig
C = 133,200

When pipe under test contains sections of various diameters, calculate allowable leakage from sum of computed leakage for each size.

g. When test of pipe indicates leakage greater than allowed, locate source of leakage, make corrections and retest until leakage is within allowable limits. Correct visible leaks regardless of quantity of leakage.

3. Hydrostatic Leakage Test for Polyethylene Pipe with heat-fused joints.

a. This testing procedure allows zero leakage tolerance because leakage indicates improperly made joints. This procedure provides an allowance for normal elastic and plastic expansion of the piping.

b. Perform initial hydrostatic test before installing any mechanical connections to valves, services, or other piping materials.

c. Where services are also polyethylene pipe and are connected with heat-fused joints, test the services concurrently with the main.

d. Install heat-fused polyethylene caps at the ends of sections to be tested. Where end caps are at high points install temporary taps to facilitate removal of air.

e. Hydrostatically test pressure piping at a pressure between 1.0 and 1.5 times the design pressure depending on the elevation. Adjust readings of the test gauge according to the elevation of the test gauge.

f. Fill section to be tested with water slowly, expel air from piping at air release devices. The Contractor is not permitted to make additional taps or create additional air release points without written permission of the Engineer.

g. Allow the test section and the water to equalize to a common temperature.

h. Gradually increase the pressure to the required test pressure.

i. Add make-up water as necessary to maintain maximum test pressure for 4 hours as the piping undergoes initial expansion.

j. Reduce the test pressure by 10 psi and monitor pressure for a 1 hour test phase. Do not increase pressure or add make-up water during the test phase.

k. If no visual leakage is observed at the temporary taps and pressure during the test phase remains within 5% of the initial test phase pressure, a passing test is indicated.

l. If retesting is necessary, depressurize the test section at a controlled rate and correct any faults or leaks.

m. Allow the test section to "relax" for at least 8 hours before retesting.

n. Cut off temporary end caps and pipe containing temporary taps.

CONFIDENTIAL

o. Make mechanical connections to valves, service connections, and other piping materials. Do not backfill or cover the connections. Test the line using the same procedure outlined above to test the connections. If no visible leakage is observed at the connections, a passing test is indicated.

D. Concrete Manholes:

1. General: Test using air whenever possible prior to backfilling to assist in locating leaks. Make joint repairs on both outside and inside of joint to ensure permanent seal.

2. Vacuum test in accordance with ASTM C1244 and as follows:

a. Inflate compression band to effect seal between vacuum base and structure; connect vacuum pump to outlet port with valve open; draw vacuum to 10 inches of Hg; close valve; start test.

b. Test:

1) Determine test duration for manhole from the following table:

Table 1 Minimum Test Times for Various Manhole Diameters (30 - 120 in.) in Seconds

Depth (ft)	Diameter, in.								
	30	33	36	42	48	54	60	66	72
	Times, in seconds								
<4	6	7	7	9	10	12	13	15	16
6	9	10	11	13	15	18	20	22	25
8	11	12	14	17	20	23	26	29	33
10	14	15	18	21	25	29	33	36	41
12	17	18	21	25	30	35	39	43	49
14	20	21	25	30	35	41	46	51	57
16	22	24	29	34	40	46	52	58	67
18	25	27	32	38	45	52	59	65	73
20	28	30	35	42	50	53	65	72	81
22	31	33	39	46	55	64	72	79	89
24	33	36	42	51	59	64	78	87	97
26	36	39	46	55	64	75	85	94	105
28	39	42	49	59	69	81	91	101	113
30	42	45	53	63	74	87	98	108	121

Record vac

2) uum drop during test period; when vacuum drop is greater than 1 inch of Hg during test period, repair and retest manhole; when vacuum drop of 1 inch of Hg does not occur during test period, discontinue test and accept manhole.

3) When vacuum test fails to meet 1 inch Hg drop in specified time after repair, repair and retest manhole.

END OF SECTION

CONFIDENTIAL

Larson Design Group

AIR PRESSURE TEST FORM FOR SEWER LINE TESTING

SEWER RUN FROM	TO	SIZE OF LINE	RUN LENGTH	START TIME	STOP TIME	PASS/ FAIL	ENGINEERS REPRESENTIVE SIGNATURE

COMMENTS:

* ALL LINES MUST PASS THE PRESSURE TEST PRIOR TO PAYMENT

** ALL GRAVITY SEWER PRESSURE TEST SHALL BE TESTED AT 3.5 PSIG

*** IF THE PRESSURE DROPS 1.0 PSIG BEFOR THE ALLOTED TIME THE LINE HAS FAILED THE TEST

CONFIDENTIAL

CONFIDENTIAL

SECTION 03300

CAST-IN-PLACE CONCRETE

PART 1 GENERAL

1.1 SUMMARY

A. Section includes cast-in-place concrete for the following:
   1. Building frame members.
   2. Slabs on grade.
   3. Control, expansion and contraction joint devices.
   4. Equipment pads.
   5. Thrust blocks.

1.2 REFERENCES

A. American Concrete Institute:
   1. ACI 301 - Specifications for Structural Concrete.
   2. ACI 305 - Hot Weather Concreting.
   3. ACI 306.1 - Standard Specification for Cold Weather Concreting.

1.3 SUBMITTALS

A. Section 01330 - Submittal Procedures: Submittal procedures.

B. Certifications:
   1. Submit certification of approval for concrete supplier
   2. Submit certification that all materials meet the applicable standards.

C. Product Data:
   1. Submit supplier of aggregates, and aggregate test reports performed within 30 days before the submission.
   2. Submit manufacturer's literature for all admixtures
   3. Submit data on joint devices and admixtures

D. Design Data:
   1. Submit concrete mix design for each concrete strength. Submit separate mix designs when admixtures are required for the following:
      a. Hot and cold weather concrete work.
      b. Air entrained concrete work.
   2. Identify mix ingredients and proportions, including admixtures.

1.4 CLOSEOUT SUBMITTALS

A. Section 01700 - Execution Requirements: Closeout procedures.

B. Project Record Documents: Accurately record actual locations of embedded utilities and components concealed from view in finished construction.

CONFIDENTIAL

1.5 QUALITY ASSURANCE

A. Perform Work in accordance with NYS DOT Highway Design Manual.

B. Concrete supplier shall be an approved supplier.

1.6 COORDINATION

A. Section 01300 - Administrative Requirements: Coordination and project conditions.

B. Coordinate placement of joint devices with erection of concrete formwork and placement of form accessories.

PART 2 PRODUCTS

2.1 CONCRETE MATERIALS

A. Provide concrete materials conforming to NYS DOT Highway Design Manual.

2.2 ACCESSORIES

A. Bonding Agent: Polyamid cured epoxy.

B. Non-Shrink Grout: ASTM C1107, Grade A premixed compound consisting of non-metallic aggregate, cement, water reducing and plasticizing agents; capable of developing minimum compressive strength of 2,400 psi in 48 hours and 7,000 psi in 28 days.

2.3 JOINT DEVICES AND FILLER MATERIALS

A. Joint Filler Type A ASTM D1751; Asphalt impregnated fiberboard or felt, 1/4 inch thick.

2.4 CONCRETE MIX

A. Provide in accordance with NYS DOT Highway Design Manual.

B. Schedule:
1. Slabs on grade, equipment pads, sidewalk, curbing and paving: Class AA
2. Manhole benches and channels, thrust blocks, concrete encasement and concrete fill: Class C.

PART 3 EXECUTION

3.1 EXAMINATION

A. Section 01300 - Administrative Requirements: Coordination and project conditions.

B. Verify requirements for concrete cover over reinforcement.

C. Verify anchors, seats, plates, reinforcement and other items to be cast into concrete are accurately placed, positioned securely, and will not interfere with placing concrete.

CONFIDENTIAL

3.2 PREPARATION

A. Prepare previously placed concrete by cleaning with steel brush and applying bonding agent.

B. In locations where new concrete is doweled to existing work, drill holes in existing concrete, insert steel dowels and pack solid with non-shrink grout.

3.3 PLACING CONCRETE

A. Place concrete in accordance with ACI 301.

B. Notify Architect/Engineer minimum 24 hours prior to commencement of operations.

C. Ensure reinforcement, inserts, embedded parts, formed expansion and contraction joints, and are not disturbed during concrete placement.

3.4 CONCRETE FINISHING

A. Slabs on grade, sidewalks and paving:
1. Floated finish.
2. Trowel.
3. Broom.

B. Manhole flow channels
1. Smooth trowel

C. Formed surfaces
1. Rubbed with carborundum brick.

3.5 CURING AND PROTECTION

A. Immediately after placement, protect concrete from premature drying, excessively hot or cold temperatures, and mechanical injury.

B. Maintain concrete with minimal moisture loss at relatively constant temperature for period necessary for hydration of cement and hardening of concrete.

3.6 FIELD QUALITY CONTROL

A. Section 01400 - Quality Requirements: Testing and Inspection Services.

B. Field inspection and testing will be performed in accordance with ACI 301 and under provisions of Section 01400.

C. Provide free access to Work and cooperate with appointed firm.

D. Submit proposed mix design of each class of concrete to inspection and testing firm for review prior to commencement of Work.

CONFIDENTIAL

E. Tests of cement and aggregates may be performed to ensure conformance with specified requirements.

F. Take cylinders as follows:
   1. For large pours using more than one truck load of concrete, take cylinders from each truck load of concrete.
   2. For pours of less than 9 cubic yards, take one set of cylinders for the pour.

G. One additional test cylinder will be taken during cold weather concreting, cured on job site under same conditions as concrete it represents.

H. One slump test will be taken for each truck load of concrete.

I. One air content test will be made for each truck load of concrete.

J. Testing is waived for concrete used for pipe encasement and thrust blocks.

K. Maintain records of concrete placement. Record date, location, quantity, air temperature and test samples taken.

3.7 PATCHING

A. Allow Engineer to inspect concrete surfaces immediately upon removal of forms.

B. Excessive honeycomb or embedded debris in concrete is not acceptable. Notify Architect/Engineer upon discovery.

C. Patch imperfections as directed by Engineer in accordance with ACI 301.

3.8 DEFECTIVE CONCRETE

A. Defective Concrete: Concrete not conforming to required lines, details, dimensions, tolerances or specified requirements.

B. Repair or replacement of defective concrete will be determined by Engineer.

C. Do not patch, fill, touch-up, repair, or replace exposed concrete except upon express direction of Engineer for each individual area.

END OF SECTION 03300

CONFIDENTIAL

SECTION 03470

PRECAST CONCRETE VAULTS

PART 1 - GENERAL

1.1 SUMMARY

A. Section Includes:
   1. This section describes materials and methods for furnishing and installing precast concrete wet wells, valve and meter chambers at the locations shown on the drawings.

1.2 SUBMITTALS

A. Section 01330 - Submittal Procedures: Requirements for submittals.

B. Shop Drawings: Submit typical details of construction for precast concrete vaults.

C. Product Data: Submit covers, component construction, features, configurations, and dimensions.

1.3 QUALIFICATIONS

A. Manufacturer: Manufacturer shall be certified by the National Precast Concrete Association, and shall have five years experience making vaults of this type.

1.4 DELIVERY, STORAGE AND HANDLING

A. Section 01600 - Product Requirements: Product storage and handling requirements.

B. Comply with the precast concrete manufacturer's instructions for unloading, storing, and moving precast vaults.

C. Store precast concrete vaults to prevent damage to the Owner's property or other public or private property. Repair property damaged from material storage.

D. Mark each precast structure by indentation or waterproof paint showing date of manufacture, manufacturer, and identifying symbols and numbers shown on Drawings to indicate its intended use.

PART 2 - PRODUCTS

2.1 CONCRETE

A. Concrete used for structural components shall have a minimum compressive strength of 5,000 psi at 28 days. Other concrete shall have a minimum compressive strength of

CONFIDENTIAL

3,000 psi at 28 days. Reinforcing bars shall conform to ASTM A615, Grade 60. Welded steel wire fabric reinforcing shall conform to ASTM A185.

2.2 HATCHES

A. Access Hatch: 1/4 inches thick aluminum with diamond pattern, stainless steel hinges, anchor flange, drainage coupling, snap lock, automatic hold-open arm to 90 degrees, stainless steel hardware.

B. All hatches to meet H-20 loading criteria.

2.3 STEPS

A. Formed reinforced polypropylene with concrete inserts.
1. Minimum ½" grade 60 reinforcing bar.
2. Co-polymer polypropylene plastic.
3. 12" width, 5 ¾" projection from wall.
4. Conforming to ASTM C478.

2.4 CONFIGURATION

A. Shape: as indicated on the Drawings.

B. Design Depth as indicated on Drawings.

C. Clear Cover Opening as detailed on the Drawings.

D. Pipe Entry: Furnish resilient.
1. Manufacturers
1. A-lok – 92 or 93 series as applicable
2. Press Seal – Press Wedge
3. Chardon Rubber – Lock Joint
4. Or Approved Equal

E. Structure Joint Gaskets: ASTM C361/Rubber or Butyl Rubber adhesive, conforming to ASTM C478.

F. Steps: 12-inches on center vertically, set into structure wall

2.5 ACCESSORIES

A. Concrete: Specified in Section 03300.

B. Grout: Specified in Section 03300.

2.6 BEDDING AND COVER MATERIALS

A. Bedding: Type 2 Fill as specified in Section 02300.

CONFIDENTIAL

B. Backfill from Above Pipe to Finish Grade: Aggregate or soil as required in Section 02300.

PART 3 - EXECUTION

3.1 EXAMINATION

A. Section 01300 - Administrative Requirements: Verification of existing conditions before starting work.

3.2 PREPARATION

A. Coordinate placement of pipe required by other Sections.

B. Inspect precast concrete vaults immediately prior to placement in excavation to verify vaults are internally clean and free from damage. Remove and replace damaged units.

3.3 INSTALLATION - GENERAL

A. Excavation and Backfill:
1. Excavate for vaults in accordance with Section 02300 in location and to depth shown. Provide clearance around sidewalls of vault or structure for construction operations.
2. When groundwater is encountered, prevent accumulation of water in excavations. Place vaults or structures in dry trench.
3. Where the possibility exists of vault becoming buoyant in flooded excavation, anchor vault to avoid flotation.

B. Install vaults supported at proper grade and alignment on crushed stone bedding as shown on Drawings.

C. Backfill excavations for vaults in accordance with Section 02300.

3.4 PRECAST CONCRETE VAULT INSTALLATION

A. Lift precast vaults at lifting points designated by manufacturer.

B. When lowering vaults into excavations and joining pipe to units, take precautions to ensure interior of pipeline and vault or structure remains clean.

C. Set precast vaults bearing firmly and fully on crushed stone bedding, compacted in accordance with provisions of Section 02300.

D. Assemble multi-section vaults by lowering each section into excavation. Install joint sealer between precast sections in accordance with manufacturer's recommendations. Lower, set level, and firmly position base section before placing additional sections.

CONFIDENTIAL

E. Remove foreign materials from joint surfaces and verify sealing materials are placed properly. Maintain alignment between sections by using guide devices affixed to lower section.

F. Install joint sealing materials on site.

G. Verify that the vaults have been set to the required alignment and grade.

H. Construct the vault base using cast-in place concrete as detailed on the Drawings:
1. Provide floor slope with smooth lines, grades and transitions.

3.5 FIELD QUALITY CONTROL

A. Section 01700 - Execution Requirements: Field inspecting, testing, adjusting, and balancing.

B. Test cast-in-place concrete in accordance with Section 03300.

C. Leakage Testing
1. Visibly inspect each vault for infiltration after all pipe sections are connected.
2. Provide all materials necessary to conduct testing and necessary repairs.
3. Properly plug pipe inlets, outlets and the floor drain.
4. Completely fill the vault with water.
5. Allow at least four hours to elapse.
6. After four hours fill vault to top with water.
7. Should additional leakage become evident or the water level changes by more than one inch in a 24 hour period, the structure shall be drained and the leaks repaired by an approved method.
8. The same test procedure as described above shall be repeated until no leaks are observed, or until the observed water level does not lower by more than one inch in a twenty-four hour period.

END OF SECTION 03470

CONFIDENTIAL

SECTION 09900

PAINTING

PART 1 - GENERAL

1.1 RELATED DOCUMENTS

A. Drawings and general provisions of Contract, including General and Supplementary Conditions and Division 1 Specification sections, apply to this section.

1.2 SUMMARY

A. This Section includes surface preparation, painting, and finishing of exposed interior and exterior items and surfaces.

1) Surface preparation, priming, and finish coats specified in this section are in addition to shop priming and surface treatment specified under other sections.

B. Paint exposed surfaces whether or not colors are designated in "schedules," except where a surface or material is specifically indicated not to be painted or is to remain natural. Where an item or surface is not specifically mentioned, paint the same as similar adjacent materials or surfaces. If color or finish is not designated, the Architect will select from standard colors or finishes available.

C. Painting is not required on prefinished items, finished metal surfaces, concealed surfaces, operating parts, and labels.

1) Labels: Do not paint over Underwriter's Laboratories, Factory Mutual or other code-required labels or equipment name, identification, performance rating, or nomenclature plates.

D. The contractor shall furnish all painting materials and equipment and shall perform all labor necessary to provide a finished and completely acceptable painting job for the entire project. Painting work shall be done only at such times and under such conditions to assure a durable, dust-free and workmanlike job. All painting work shall be done in strict accordance with the paint manufacturers published instructions in concert with this section of the specifications. Where manufacturer's recommended materials, surface preparation, number of coats or mil thickness exceed those shown in the specifications, the recommendations of the manufacturer shall govern.

E. The contractor shall perform all required field painting of those items furnished and installed by the other prime contractors. Shop painting of fabricated items shall be the responsibility of the contractor furnishing such items, and shop paint used on a particular surface shall be compatible with the field paint subsequently applied by the contractor to the same surface.

F. All buildings, facilities, structures and appurtenances included in this project which are customarily painted shall be painted with no less than one shop coat and two field coats, or one prime coat and two finish coats of the appropriate paint, unless otherwise

CONFIDENTIAL

specified. Surfaces of exposed members that will not be accessible after erection shall be cleaned and painted before erection.

G. Baked-on enamel finishes and items with standard shop finishes, graphic panels, electrical equipment, toilet partitions, instrumentation, etc., shall not be repainted unless otherwise specified. Aluminum, stainless steel, copper, bronze, and plastic shall not be painted unless color coding and marking is required.

H. The contractor shall purchase paint from an approved manufacturer. The manufacturer shall assign a representative to inspect the application of this product, both in the shop and in the field. The manufacturer's representative shall submit his report to the engineer at the completion of his work, identifying the products used and verifying that said products were properly applied and that the paint systems were proper for the exposure and service. The manufacturer's representative shall also certify that all coats in each system are compatible with one another.

I. Field painting shall be by an approved painting subcontractor unless the general contractor has had a successful experience record of painting on similar sized projects. The general contractor shall submit his experience record (or that of proposed subcontractor) for approval.

1.3 QUALITY ASSURANCE

A. Job Mock-Up:

1) Minimum 50-sq. ft. application of each specified coating system on each type of substrate as required by the engineer.

2) Mock-ups will serve as standard for acceptance of work.

3) Leave approved mock-ups in place as part of completed project.

4) Manufacturer's representative shall be available to advise applicator of proper application techniques.

1.4 REFERENCE STANDARDS

A. American Society of Testing and Materials (ASTM)
1) ASTM D2805, Contrast Ratio
2) ASTM D1308, Stain Resistance
3) ASTM E84, Surface Burning Characteristics of Building Materials
4) ASTM D2522, Conical Mandrel Elongation
5) ASTM D2246, Freeze Thaw
6) ASTM D4585, Condensing Humidity
7) ASTM D3363, Hardness
8) ASTM E308, Light Reflectance
9) ASTM B117, Salt Spray
10) ASTM D3359B, Adhesion
11) ASTM D4060, Abrasion
12) ASTM D4541, Adhesion
13) ASTM D4123, Scrubbability

CONFIDENTIAL

B. Federal Test Methods:

1) Standard No. 141, Method 6271, Fungal Resistance
2) Standard No. 141, Method 642, Scrubbability
3) Standard No. TT-C-550C, Paragraphs 4.4.5.2 and 4.4.5.2, Stain Removal
4) Standard No. TT-C-550C, Paragraph 4.4.6, Chemical Resistance
5) Standard No. TT-C-555B, Paragraph 4.4.7.3, Wind Driven Rain

C. American Institute of Steel Construction (AISC)

1) AISC Research Council on Structural Connection Specifications, Appendix A, Section 4.1

D. Consumer Product Safety Act Regulations

1) Part 1303 - "non-lead"

E. National Sanitation Foundation International (NSF)

1) ANSI/NSF Std. 61

1.5 SUBMITTALS

A. Product Data: Manufacturer's descriptive data fully describing each product to include generic type solids by volume and weight per gallon. Include manufacturer's recommendations for mixing, thinning and curing.

B. Certificates: Manufacturer's certified test reports confirming performance with applicable coating test requirements under Paragraph 2.3.

1) Colors: Two 5" x 7" samples of each selected color.

1.6 PRODUCT DELIVERY, STORAGE, HANDLING

A. Deliver materials in factory-sealed containers with manufacturer's labels intact and legible.

B. Store materials in a protected area at a temperature between 60°F and 110°F.

1.7 JOB CONDITIONS

A. Apply coating only under the following conditions:

1) The air and surface temperatures are within the manufacturers requirements for the product in question.

2) Relative humidity is not above 85% and the surface temperature is at least 5°F above the dew point

3) Protect all surfaces not to be coated

CONFIDENTIAL

1.8 SAFETY

A. Submit to the client current manufacturer's data sheets, as well as Material Safety Data Sheets. Also, have these documents available to your employees at the job site. These are considered working documents; be familiar with them.

B. Make sure your employees are aware of any hazards associated with the job site or the coating, as well as locations of first aid stations, emergency phone numbers and evacuation routes.

C. Report to a responsible person such as safety engineer, sub-contracts administrator, etc., any condition which may pose a threat to the health and welfare of your employees.

D. Keep your own working area clean and safe.

E. Obey all job site rules and regulations.

F. Work in confined space will be conducted in accordance with OSHA Confined Space Entry Regulations.

PART 2 – PRODUCTS

2.1 ACCEPTABLE MANUFACTURERS

A. Available Manufacturers: Subject to compliance with requirements, manufacturers offering products that may be incorporated in the work include but are not limited to the following:

B. Manufacturer: Subject to compliance with requirements, provide products of one of the following:

1) Tnemec (Tnemec).
2) The Glidden Company (Glidden).
3) Benjamin Moore and Co. (Moore).
4) PPG Industries, Pittsburgh Paints (Pittsburgh).
5) Pratt and Lambert (P & L).
6) The Sherwin-Williams Company (S-W).
7) Valspar (V)
8) Or Approved Equal

2.2 MATERIALS

A. The term paint shall mean both paints and coating including emulsions, enamels, stains, varnishes, sealers and all other coatings, whether organic or inorganic and whether used as prime, intermediate, or finish coats.

B. The contractor shall coordinate the use of coatings such that shop coatings and field coatings are supplied by the same manufacturer and that shop and field coats are compatible.

CONFIDENTIAL

C. All materials that will be in contact with potable water shall be approved by NSF, the National Sanitation Foundation. Contractor shall submit evidence of approval for all applicable materials.

2.3 PRODUCT REQUIREMENTS

A. Performance Data for all appropriate tests as listed in Section 1.4 Reference Standards; A, B, C, D, and E for all coatings submitted.

2.4 MATERIAL PREPARATION

A. Mix and thin materials according to manufacturer's latest printed instructions.

B. Do not use materials beyond manufacturer's recommended shelf life.

C. Do not use mixed materials beyond manufacturer's recommended pot life.

PART 3 - EXECUTION

3.1 PRE-WORK INSPECTION

A. Examine surfaces to be coated and report conditions that would adversely affect appearance for performance of coating systems and which cannot be put into an acceptable condition by preparatory work specified in Paragraph 3.2.

B. Do not proceed with surface preparation and application until surface is acceptable or authorization to proceed is given by engineer.

3.2 SURFACE PREPARATION

A. General:

1) Dislodge dirt, rust, plaster nibs, mortar spatter and other dry material by scraping or brushing. Remove dust and loose material by brushing, sweeping, vacuuming or blowing with high-pressure air.

2) Remove oil, wax, and grease by scraping off heavy deposits and cleaning with mineral spirits or a hot trisodium phosphate solution followed by a water rinse.

3) Verify that surfaces to be coated are dry, clean and free of dust, dirt, oil, wax, grease or other contaminants.

4) Hardware accessories, machined surfaces, plates, lighting fixtures, and similar items in place prior to cleansing and painting and not intended to be painted, shall be protected or removed during painting operations and repositioned upon completion of painting operations.

5) All surface preparation shall be in strict accordance with the recommendations of the paint manufacturer.

B. Concrete, Masonry and Cement Stucco:

CONFIDENTIAL

1) Allow new concrete and masonry to cure 28 days.

2) Scrape and grind fins and protrusions flush with surface

3) Patch holes and cracks flush with surface.

4) Rake mortar joints clean.

5) Low Pressure Water Cleaning:

a. Water is sprayed at pressures between 3,000 and 5,000 psi to remove dirt and contaminants.

b. Only fresh potable water shall be used for this procedure.

c. Biodegradable detergent shall be used followed by a fresh water rinse to ensure a clean substrate.

6) Abrasive Blasting:

a. Brush-off blasting of the concrete shall be described as lightly abrading the surface without entirely removing the surface or exposing underlying aggregate. Brush-off blasting shall open up subsurface holes and voids and etch the surface sufficiently for the coating to bond and adhere satisfactorily. Care shall be taken during blasting that the concrete is not eroded beyond what is necessary.

b. Dry blasting equipment with compressed air blast nozzle shall be used for blasting concrete. The abrasive used shall have a maximum particle size that will pass through a 16-mesh screen. After blast cleaning is completed, dust and loose particles shall be removed from the surface by vacuuming or blowing off with high-pressure air. Voids or cracks that will cause discontinuities in the coating or unsightly appearance shall be routed out to ¼ inch and patched in accordance with system specifications.

c. All floor and tank drains subject to blasting residue shall be plugged prior to blasting. After blasting is completed, all residue shall be removed from the area prior to opening the drains. Under no circumstances shall blasting residue be allowed to enter tank or floor drains.

C. Non-Ferrous Metal:

1) SSPC-SP1 Solvent cleaning to remove all soluble contaminants.

2)

D. Ferrous Metal:

CONFIDENTIAL

1) General: All ferrous metal to be primed in the shop shall have all rust, dust, and scale removed by abrasive blasting in accordance with SSPC (Steel Structures Painting Council) procedures designated in the specifications or on the contract drawings. Cleaned metal shall be primed or pretreated immediately after cleaning to prevent rusting. If rusting beyond ASTM Rust Grade 8 occurs in the field, the rusted portions of shop-primed ferrous metals shall be field-cleaned down to bright metal by blasting and immediately field primed. All ferrous metal not primed in the shop shall be blasted as specified prior to application of any primer or paint. Surface preparation criteria for ferrous metals, as defined by Steel Structures Painting Council, are as follows:

a. SSPC-SP1 Solvent Cleaning: Removal of oil, grease, soil, drawing and cutting compounds, and other soluble contaminants from surfaces with solvents or commercial cleaners using various methods of cleaning such as wiping, dipping, steam cleaning vapor degreasing.

1) It is generally conceded that solvent wiping will not positively remove all oil and grease from the surface. Therefore, a more efficient cleaning method such as vapor degreasing or steam cleaning should be employed where coatings will not tolerate any oil or grease residue.

2) Oil and grease removal by solvent cleaning is included in all other SSPC. Surface Preparation Specifications; it is not necessary to cite SSPC-SP1 separately when these other specifications are used.

3) SSPC-SP5 White Metal Blast Cleaning. The complete removal of all visible oil, grease, dirt, dust, mill scale, rust, paint, oxides, corrosion products and other foreign matter by compressed air nozzle blasting, centrifugal wheels or other specified method.

4) SSPC-SP6 Commercial Blast Cleaning. The removal of all visible oil, grease, dirt, dust, mill scale, rust, paint, oxides, corrosion products and other foreign matter by compressed air nozzle blasting, centrifugal wheels or other specified method. Discoloration caused by certain stains shall be limited to no more than 33 percent of each unit area. Unit area is approximately 9 square inches.

5) SSPC-SSP7 Brush-Off Blast Cleaning. The removal of all visible oil, grease, dirt, dust, loose mill scale, loose rust, and loose paint by compressed air nozzle blasting, centrifugal wheels or other specific method. Tightly adherent mill scale, rust and paint may remain on the surface. Mill scale, rust and paint are considered tightly adherent if they cannot be removed by lifting with a dull putty knife.

6) SSPC-SP10 Near White Metal Blast Cleaning. The removal of all visible oil, grease dirt, dust, mill scale, rust, paint, oxides,

CONFIDENTIAL

corrosion products and other foreign matter by compressed air nozzle blasting, centrifugal wheels or other specified method. Discoloration caused by certain stains shall be limited to no more than 5 percent of each unit area. Unit area is approximately 9 square inches.

7) SSPC-SP11 Power Tool Cleaning to Bare Metal. The removal of all visible oil, grease, dirt, mill scale, rust, paint, oxides, corrosion products, and other foreign matter. Slight residues of rust and paint may be left in the lower portion of pits if the original surface is pitted. Differs from SSPC-SP3 in that it requires more thorough cleaning and a surface profile not less than 1 mil (25 microns). For areas where abrasive blasting is prohibited or not feasible.

8) SSPC-SP12 Surface Preparation by Water Jetting. Surface preparation and cleaning of steel and other hard materials by high and ultra-high pressure water jetting to achieve various degrees of surface cleanliness prior to recoating. This standard is limited in scope to the use of water only without the addition of solid particles in the stream. Refer to the full standard for all details regarding this preparation method.

E. Galvanized Metal:

1) SSPC-SP1 Solvent cleaning to remove all soluble contaminants.

2) SSPC-SP2 Hand Tool cleaning to remove all insoluble contaminants.

3) Brush-Off Blast to achieve a light uniform profile for exterior exposure.

F. Concrete Floors:

1) Prepare concrete floors by brush-off blasting or mechanical shot blasting in accordance with manufacturer's recommended procedure.

3.3 APPLICATION

A. Apply materials at specified film thickness by method recommended by manufacturer.

B. First coat for porous masonry surfaces, concrete and dense masonry shall be applied by suitable method to completely fill voids and surface irregularities.

C. Allow each coat to dry thoroughly before recoating. Follow manufacturers recommended re-coat time.

D. Cut edges clean and sharp where work joins other materials or colors.

E. Make finish coats smooth, uniform in color, and free of brush marks, laps, runs, dry spray, over-spray, and skipped or missed areas.

CONFIDENTIAL

F. Shop Painting: All fabricated steelwork and equipment shall receive at the factory at least one (1) shop coat of prime paint as required by these specifications. Surface preparation prior to shop painting shall be specified. All shop painted items shall be properly packaged and stored until they are incorporated in the work. Flange faces in piping, valves and fittings shall be completely prime coated prior to installation. Any painted surfaces that are damaged during handling, transportation storage or installation shall be cleaned, scraped and patched before field painting begins so that the work shall be equal to the original painting received at the shop. Equipment or steelwork that is to be assembled on the site shall likewise receive a minimum of one shop coat of paint at the factory. The paints and surface preparation used for shop coating shall be identified on shop drawings submitted to the engineer. Where the exact identity of the shop primer cannot be determined, or where primer differs from that specified, the contractor shall perform the proper surface preparation followed by the specified paint system.

3.4 INSPECTION

A. Request acceptance of each coat before applying succeeding coats.

B. Repair and touch-up all work that is not acceptable to the engineer and request final acceptance.

3.5 CLEANING

A. Remove paint spatters from glass, plumbing fixtures and adjoining surfaces.

B. Repair damage to coatings or surfaces caused by cleaning operations.

C. Remove debris from job site and leave storage areas clean.

3.6 PAINTING SCHEDULE

A. Surfaces not to be painted:

1) Face brick

2) Pre-finished wall panels, partitions and ceiling tiles

3) Items with factory-applied final finish

4) Concealed ducts, pipes and conduit

B. The painting contractor shall prepare a complete schedule of surface preparation and paint systems he proposes to use in the work. This schedule shall list all interior and exterior surfaces and all major equipment to be painted. The schedule shall be in conformance with the specifications and contract drawings. The schedule shall reflect the paint manufacturer's recommendations for the coating systems, and shall contain certification that the manufacturer's representative has reviewed and approved the schedule. The schedule shall itemize each painted item or surface and shall contain the following information in neat tabular form:

1) Type of surface preparation (note whether shop or field preparation)

CONFIDENTIAL

2) Paint system (generic name)
3) Prime coat (product, number of coats, dry mil thickness per coat, square feet coverage per gallon)
4) Intermediate coat, if required (product, number of coats, dry mill thickness per coat, square feet coverage per gallon)
5) Finish coat (product, number of coats, dry mil thickness per coat, square feet coverage per gallon)
6) Painting status at time of installation
7) Remarks (any special treatment or application requirements, etc.)

C. The schedule shall also contain the name of the paint manufacturer and name, address and telephone number of the manufacturer's representative. Manufacturer's recommended dry mil thickness shall be incorporated into the schedule. The schedule shall be submitted to the engineer as soon as possible to identify colors and to specify shop paint systems for fabricated equipment.

3.7 COATING SYSTEMS

A. Steel-Architectural, Structural, Tanks, Pipes and Equipment

		DFT
1)	Exterior-Non-Immersion – (Tnemec)	
	Surface Preparation: SSPC-SP6	
	1st Coat: **90-97 Tnemec-Zinc**	2.5-3.5
	2nd Coat: **N-69-color Hi-Build Epoxoline II (1)**	3.0-5.0
	3rd Coat: **1075-color Endura-Shield II**	2.0-3.0
		7.5-11.5
2)	Exterior-Non-Immersion – (S-W)	
	Surface Preparation: SSPC-SP6	
	1st Coat: **Zinc-Clad IV**	3.0-5.0
	2nd Coat: **Dura-Plate 235** (1)	3.0-6.0
	3rd Coat: **Dura-Plate 235** (1)	3.0-5.0
		9.0-16.0
3)	Interior-Non-Immersion (Tnemec)	
	Surface Preparation: SSPC-SP 6	
	1st Coat: **N-69-1211 Hi-Build Epoxoline II** (1)	3.0-5.0
	2nd Coat: **N-69-color Hi-Build Epoxoline II** (1)	3.0-5.0
	3rd Coat: **N-69-color Hi-Build Epoxoline II** (1)	3.0-5.0
		9.0-15.0
4)	Interior-Non-Immersion (S-W)	
	Surface Preparation: SSPC-SP 6	
	1st Coat: **Dura-Plate 235** (1)	4.0-8.0
	2nd Coat: **Dura-Plate 235** (1)	4.0-8.0
		8.0-16.0
5)	Immersion - Non-Potable Water (Tnemec)	
	Surface Preparation: SSPC-SP10	
	1st Coat: **N-69-1211 Hi-Build Epoxoline II** (1)	3.0-5.0
	2nd Coat: **N-69-1211 Hi-Build Epoxoline II** (1)	3.0-5.0

CONFIDENTIAL

	3rd Coat: **N-69-1211 Hi-Build Epoxoline II** (1)	3.0-5.0
		9.0-15.0
6)	Immersion - Non-Potable Water (S-W)	
	Surface Preparation: SSPC-SP10	
	1st Coat: **Dura-Plate 235** (1)	4.0-8.0
	2nd Coat: **Dura-Plate 235** (1)	4.0-8.0
		8.0-16.0
7)	Immersion - Non-Potable Water (Coal Tar Epoxy) – (Tnemec)	
	Surface preparation: SSPC-SP10	
	1st Coat: **N-69-1211 Hi-Build Epoxoline II**	3.0-5.0
	2nd Coat: **46H-413 Hi-Build Tneme-Tar**	16.0-18.0
		19.0-23.0
8)	Immersion - Non-Potable Water (Coal Tar Epoxy) – (S-W)	
	Surface preparation: SSPC-SP10	
	1st Coat: **Dura-Plate 235** (1)	4.0-8.0
	2nd Coat: **TarGuard Coal Tar Epoxy**	8.0-16.0
	3rd Coat: **TarGuard Coal Tar Epoxy**	8.0-16.0
		20.0-40.0
9)	Immersion – Non-Potable for Exposures to Hydrogen Sulfide, Sulfuric Acid and Industrial Waste Condensates. (To be used on piping in Sludge Digester)	
	Surface Preparation: SSPC-SP5 Minimum Anchor Pattern 3.0 mils	
	1st Coat: **120-5002 (Beige) Vinester**	16.0-18.0
	2nd Coat: **120-5001 (Gray) Vinester**	16.0-18.0
		Tnemec - 32.0-36.0
10)	Immersion – Non-Potable for Exposures to Hydrogen Sulfide, Sulfuric Acid and Industrial Waste Condensates. (To be used on piping in Sludge Digester)	
	Surface Preparation: SSPC-SP5 Minimum Anchor Pattern 3.0 mils	
	1st Coat: **Dura-Plate 235** (1)	4.0-8.0
	2nd Coat: **Dura-Plate UHS**	10.0-12.0
	3rd Coat: **Dura-Plate UHS**	10.0-12.0
		S-W - 24.0-34.0

B. Galvanized Steel - Pipe, Roof Deck

1)	Exterior - Non-Immersion (Tnemec)	
	Surface Preparation: SSPC-SP1 and SSPC-SP7	
	1st Coat: **N-69-color Hi-Build Epoxoline II** (1)	3.0-5.0
	2nd Coat: **1075-color Endura-Shield II**	2.0-3.0
		5.0-8.0
2)	Interior - Non-Immersion (Tnemec)	
	Surface Preparation: SSPC-SP1 and SSPC-SP2	
	1st Coat: **N-69-color Hi-Build Epoxoline II** (1)	3.0-5.0
	2nd Coat: **N-69-color Hi-Build Epoxoline II** (1)	3.0-5.0
		6.0-10.0

CONFIDENTIAL

3) Interior and Exterior - Non-Immersion (S-W)
Surface Preparation: SSPC-SP1
1st Coat: **Dura-Plate 235** (1) 4.0-8.0

C. Concrete – For all concrete surfaces

1) Immersion - Non-Potable Water (Coal Tar Epoxy) – (Tnemec)
Surface Preparation: Brush-Off Blast
Pit Filling: **63-1500 Filler & Surfacer**
(Fill holes and cracks flush)
1st Coat: **46H-413 Hi-Build Tneme-Tar** 16.0-20.0
16.0-20.0

2) Immersion - Non-Potable Water (Coal Tar Epoxy) – (S-W)
Surface Preparation: SSPC-SP13
Pit Filling: **Kem Cati-Coat HS Epoxy Filler Sealer**
(Fill holes and cracks flush)
1st Coat: **Corothane I Coal Tar** 5.0-7.0
2nd Coat: **Corothane I Coal Tar** 5.0-7.0
10.0-14.0

Notes:
(1) Brush or roller application and spray application on metal deck and bar joist ceilings may require two coats to achieve required mil thickness.

(2) Actual film thickness will depend on porosity of substrate.

3.8 COLOR CODING OR PIPING

A. The contractor shall apply color coding to all plant piping, in accordance with Table 09900-1, Piping Color and Label Schedule.

1) Plant piping shall be painted solid colors unless otherwise specified.

B. On piping designated to receive identification bands, such band shall be 2 inches wide, neatly made by masking and spaced at intervals of 30 inches on centers regardless of the diameter of the pipe being painted. The contractor may use approved pre-cut and pre-finished metal or plastic bands, if approved by the engineer. Where specified, dual bands shall be 1 inch wide (each color), and separated by a distance of ¾ inch.

C. Prior to painting on PVC pipe, pipe shall be properly cleaned and abraded by sanding.

3.9 PIPING LABELS

A. The contractor shall apply identification labels to all types and sections of piping, as outlined herein. Such labels shall be in the form of plain block lettering, giving the name of the pipe content in full and showing the direction of flow by arrows. The label wording shall be exactly as given in Table 09900-1, Piping color and Label Schedule (only legends with over 20 characters may be abbreviated). All lettering shall have an overall height in inches in accordance with the following table:

CONFIDENTIAL

Diameter of Pipe Or Pipe Covering	Height of Lettering
¾ to 1 ¼ inch	½ inch
1 ½ to 2 inches	¾ inch
2 ½ to 6 inches	1 ¼ inch
8 to 10 inches	3 ½ inch

B. Piping labels shall be located as follows:

1) Adjacent to each valve and fitting (except at pump suction and discharge connections where labels are required on headers only).

2) At each branch and riser take-off.

3) At each pipe passage through wall, floor or ceiling.

4) Maximum distance between labels shall be 10 feet on all chemical and chlorine solution lines, with the minimum or two (2) labels in each room, gallery or tunnel. Maximum distance between labels on all other piping runs shall be 20 feet.

5) Identification lettering shall be located midway between color coding bands where possible, and shall be properly inclined to the pipe axis to facilitate easy reading. In the event lettering and arrow identifications are required to piping less than ¾ inch diameter, the contractor shall furnish and attach approved color coded tags where instructed.

6) Labels shall be removable semi-rigid plastic (not pressure-sensitive) for identification markers meeting all applicable ANSI and OSHA standards, as manufactured by Seton Name Plate Corporation.

7) Contractor is advised that, due to the nature of this project, labels may require custom fabrication.

CONFIDENTIAL

TABLE 09900-1 PIPING COLOR AND LABEL SCHEDULE

LEGEND	LABEL	PIPE COLOR
Raw Water	G	Green
Blended Water	G	Green
Filtered Water	G	Light Blue
Fresh Water	LB	Medium Blue
Surface Sweep Supply	LB	Medium Blue
Filter Drain	BR	Medium Brown
High Pressure Water	G	Dark Blue
Potable Water	G	Dark Blue
Plant Water	B	Medium Blue
Sedimentation Basin Sludge	BR	Dark Brown
Sludge Bypass	BR	Dark Brown
Thickener Supply	BR	Medium Brown
Thickener Bypass	BR	Medium Brown
Thickener Overflow	GR	Light Gray
Thickener Sludge	DB	Dark Brown
Chlorine	Y	Yellow Band
Alum	Y	Orange Band

Label Color Code

G - Green with Black Letters
W - White with Black Letters
Y - Yellow with Black Letters
BR - Light Brown with Black Letters
DB - Dark Brown with White Letters
GR - Light Gray with Black Letters
B - Blue with White Letters
LB - Light Blue with Black Letters

END OF SECTION 09900

CONFIDENTIAL

SECTION 11060
PIPING AND VALVES INSIDE OF STRUCTURES

PART 1 GENERAL

1.1 SUMMARY

A. Section Includes: Piping, valves, and appurtenances for inside structures.

B. Related Sections
1. Section 01300 - Submittals
2. Section 01600 - Product Requirements
3. Section 02952 – Piping Systems Testing

1.2 REFERENCES

A. Handbook of Cast Iron Pipe Cast Iron Pipe Research Association.

B. CIPRA Standard for Flanged Pipe with Threaded Flanges.

C. ANSI A21.4/AWWA C104 - Cement-mortar Lining for Ductile Iron and Gray Iron Pipe and Fittings for Water.

D. ANSI A21.10/AWWA C153 - Ductile Iron Compact Fittings for Water Service, 3-inch through 48-inch, for Water and other Liquids.

E. ANSI A21.15/AWWA C115 - Flanged Ductile-Iron and Grey-Iron Pipe with Threaded Flanges.

F. ANSI A21.50/AWWA C150 - Thickness Design of Ductile Iron Pipes.

G. ANSI A21.51/AWWA C151 - Ductile Iron Pipe Centrifugally Cast in metal molds and Sand Lined molds for water and other Liquids.

H. ASTM A-536 - Ductile Iron Castings.

I. ASTM B88 – Standard Specification for Seamless Copper Water Tube.

J. ASTM D1784 - Rigid Poly (Vinyl Chloride) (PVC) Compounds and Chlorinated Poly (Vinyl Chloride) (PVC) Plastic pipe Schedule 80.

K. ASTM D1785 - Poly (Vinyl Chloride) (PVC) Plastic pipe, Schedules 40, 80 and 120.

L. ASTM D2467 - Socket-Type Poly (Vinyl Chloride) (PVC) Plastic Pipe Fittings, Schedule 80.

M. ASTM D2564 - Solvents Cements for Poly (Vinyl Chloride) (PVC) Plastic Pipe and Fittings.

CONFIDENTIAL

N. ASTM D2672 - Solvent Cement Joint Sockets or Belled PVC Pressure Pipe.

1.3 SUBMITTALS

A. Submit under the provisions of Section 01300 Submittals

B. Provide product data, indicating conformance to the referenced standards, and the Specifications.

C. Submit fully dimensioned pipe layout drawings.

D. Provide manufacturer's installation instructions including recommendations for pipe supports.

E. Submit manufacturer's Certifications for the products of this Section.

1.4 CLOSEOUT SUBMITTALS

A. Project Record Documents: Record actual locations of piping, valves, and appurtenances.

1.5 DELIVERY, STORAGE AND HANDLING

A. Section 01600 – Product Requirements: Requirements for transporting, handling, storing, and protecting products.

1.6 FIELD MEASUREMENTS

A. Verify measurements and elevations before assembling the products of this Section.

1.7 COORDINATION

A. Section 01300 Administrative Requirements: Requirements for coordination.

B. Coordinate work with mechanical equipment requiring piping connections, structural work requiring wall and floor penetrations.

PART 2 PRODUCTS

2.1 DUCTILE IRON PIPE AND APPURTENANCES

A. General
1. Conforming to AWWA C150, AWWA C151
2. Cement lining and seal coat conforming to AWWA C104.
3. Manufacturer's standard asphaltic exterior coating for all buried piping. All piping above grade shall have a manufacturer applied NSF61 approved Polyamidoamine Epoxy primer coat.
4. Fittings conforming to AWWA C153 with lining and coating as specified for pipe.

CONFIDENTIAL

5. Provide drilled and tapped connections for pipeline instruments and piping connections as shown on the Drawings.
6. Pipe Couplings: cast iron middle ring, ductile iron follower rings, and rubber gaskets. Epoxy painted finish.

B. Flanged Pipe: For installation inside structures and above grade
1. Class 53 thickness class.
2. 125-pound screw-on flanges, rated for a working pressure of 250 psi.
3. For piping carrying water, provide full face, 1/16-inch thick, and cloth inserted rubber gaskets.
4. For piping carrying air, provide heat resistant EPDM gaskets.
5. Ductile Iron flanged fittings
6. Stainless Steel bolts, nuts and washers.
7. Flange adaptors: Ductile Iron with wedge anchors and snap-off bolt heads at correct torque. Flange adaptors utilizing set screws are not acceptable. Asphaltic coating.

C. Mechanical Joint Pipe: For installation underground
1. Class 250 pressure class.
2. For piping carrying water, provide neoprene gaskets.
3. Ductile Iron mechanical joint fittings conforming to AWWA C153
4. Corrosion resistant t-bolts
5. Joint restraints: Ductile iron with wedge anchors and snap-off bolt heads at correct torque.

D. Resilient Seat Gate Valves

1. Manufacturers:
a) Kennedy, Inc.
b) Mueller Company
c) Clow Eddy - Iowa
d) American Flow Control
e) Or Approved Equal

2. Resilient Wedge Gate Valves: AWWA C509; iron body, bronze or ductile iron.
a) Resilient seats.
b) Stem: Non-rising bronze stem.
c) Operating Nut: Square; open counterclockwise unless otherwise indicated, provide with handwheel operator
d) Ends: Flanged Ends
e) Coating: AWWA C550; interior/exterior.
f) Sizes 12 inch diameter and smaller: 200 psig.

E. Plug Valves
1. Non-lubricated type with port area of at least 80% of full pipe area.
1. Cast Iron body with epoxy coating and lining, and welded-in nickel seats.
2. Neoprene coated cast iron plug.
3. Stainless steel/Teflon seals.

CONFIDENTIAL

4. For use inside structures and above grade, provide with flanged ends. Provide lever operator for 4" size valves, and worm gear/handwheel operators for sizes larger than 4"

F. Check Valve.
1. AWWA C508, swing check style.
2. Flanged Ends.
3. Stainless Steel shaft, ductile iron disc, outside lever and weight
4. Ductile Iron body, with AWWA C550 compliant coatings.

2.2 PIPE APPURTENANCES

A. Copper Pipe: ASTM B88, Seamless
1. Type K, soft tempered for underground use.
a. Provide in continuous lengths between fittings shown on the Drawings.
2. Type L, hard tempered for inside building use.

B. Fittings: Cast Bronze
1. Compression ends for use underground.
2. Soldered joints for use inside structures and above grade.

C. Ball Valves: Bronze body, Teflon seat, stainless steel ball, lever operator, threaded ends.

D. Hose Bibb: Rising stem, inside screw, globe style valve. Bronze body and bonnet. Stainless steel or copper nickel bronze disc. Male hose threads for 3/4-inch hose.

2.8 PIPE SUPPORTS

A. For Ductile Iron Pipe, provide pipe supports of the type detailed on the drawings, at the locations shown.

A. For other piping materials, provide pipe supports of the type and spacing recommended by the respective piping manufacturer.

2.13 AIR RELEASE VALVE

A. Cast Iron Body, Stainless Steel Internals.

B. For Force Main, provide long body style with backwash accessories, 2" inlet, ½" outlet with 5/16 inch orfice.

2.14 PRESSURE GAUGE

A. Provide Phosphor Bronze Bourdon tube type, ANSE Grade 2A accuracy
B. Provide with polypropylene case, back blowout, shatter-proof window, and glycerin filled.
C. Provide with slotted calibration screw and snubber.
D. Provide with diaphragm seal.

CONFIDENTIAL

PART 3 EXECUTION

3.1 EXAMINATION

A. Section 01300 – Administrative Requirements: Verification of existing conditions before starting work.

3.2 INTERFACES WITH OTHER PRODUCTS

A. Verify locations, locations, and sizes of piping connections for equipment.

B. Verify special requirements for pipe support at interface to equipment.

3.3 INSTALLATION

A. Thoroughly clean products before installation.

B. Protect gaskets from damage and contamination.

C. Install piping systems to accurate lines and grades without springing.

D. Support piping assemblies under 4-inch size on walls and ceiling with approved hangers and supports. Maintain headroom and clearances to the maximum extent practical.

E. Arrange piping systems to run parallel and or perpendicular with the lines of the building.

3.4 FIELD QUALITY CONTROL

A. Perform testing as specified in Section 02952.

END OF SECTION 11060

CONFIDENTIAL

SECTION 11204
WEIR PLATES, SCUM BAFFLES, AND BRACKETS

PART 1 - GENERAL

1.1 SECTION INCLUDES

A. Weir plates, scum baffles, and brackets.

1.2 REFERENCES

A. ANSI/AWWA F102 - Matched-Die-Molded, Fiberglass-Reinforced Plastic Weir Plates, Scum Baffles, and Mounting Brackets; American Water Works Association. General Conditions.

B. ASTM D 256 - Standard Test Methods for Determining the Pendulum Impact Resistance of Notched Specimens of Plastics.

C. ASTM D 570 - Standard Test Method for Water Absorption of Plastics.

D. ASTM D 638 - Standard Test Method for Tensile Properties of Plastics.

E. ASTM D 696 - Standard Test Method for Coefficient of Linear Thermal Expansion of Plastics Between -30 degrees C and 30 degrees C.

F. ASTM D 790 - Standard Test Methods for Flexural Properties of non-reinforced and Reinforced Plastics and Electrical Insulating Materials.

G. ASTM D 2583 - Test Method for Indentation Hardness of Rigid Plastics by Means of a Barcol Impressor.

1.3 SUBMITTALS

A. Submit under provisions of Section 01300.

B. Product Data: Test results of fiberglass reinforced plastic laminate.

C. Shop Drawings: Show:
   1. Critical dimensions, jointing and connections, fasteners and anchors.
   2. Materials of construction.
   3. Sizes, spacing, and locations of structural members, connections, attachments, openings, fasteners, and loads.

D. Manufacturer's installation instructions.

1.4 DELIVERY, STORAGE, AND HANDLING

A. Store products indoors and protect from construction traffic and damage.

PART 2 - PRODUCTS

2.1 WEIR PLATES, SCUM BAFFLES, AND BRACKETS

CONFIDENTIAL

A. Weir Plates, Scum Baffles, Brackets, and Plates: Fiberglass reinforced polyester resin, compression molded in matched metal die molds; provide all required lap plates, cover plates, and support brackets.
   1. Plates fabricated from cut plate stock with cut edges, notches, etc., will not be accepted.

B. Fiberglass Laminate Construction: Sheet Molding Compound (SMC) for use in water treatment systems.
   1. Glass content of laminate; 20 percent plus/minus 3 percent by weight. Resin fillers: 40 percent plus/minus 2 percent of resin mixture.
   2. Final laminate thickness: Plus/minus 10 percent of nominal specified thickness.
   3. Tensile strength (ASTM D 638): 10,000 psi.
   4. Flexural strength (ASTM D 790): 20,000 psi.
   5. Flexural modulus (ASTM D 790): 800,000 psi.
   6. Impact, notched, Izod (ASTM D 256): 10 ft-lb
   7. Barcol hardness (resin-rich surface) (ASTM D 2583): 35 minimum, average.
   8. Water absorption (ASTM D 570): 0.2 percent at 24 hrs.
   9. Coefficient of thermal expansion, ave. (ASTM D 696): 0.0000105 in/in/degree F.
   10. Test coupons prepared in accordance with ASTM D 618.
   11. Chemical resistance: Comply with ANSI/AWWA F102, Type II classification.

C. Weir Plates: (Choose color, size, etc.)
   1. 1/4 inch nominal thickness.
   2. Color: White
   3. Color: Turquoise.
   4. Height: 9 inches.
   5. Height: 12 inches.
   6. Notches: 2-1/2 inches deep by 90 degrees on 6 inch centers.
   7. Notches: 3 inches deep by 90 degrees on 6 inch centers.
   8. Length: Nominal 5 feet long.
   9. Length: Nominal 7 feet long.
   10. Mounting holes on round tanks: 2-1/2 inches square at 20 inches on center to provide a minimum 2 inches vertical or horizontal adjustment.
   11. Mounting holes on rectangular tanks: 4 each, 2-1/2 inches square at 12 inches on center to provide a minimum 2 inches vertical or horizontal adjustment.
   12. Mounting: 1/2 inch diameter stainless steel anchor bolts and 5 inch square fiberglass cover plates to prevent short circuiting of water.
   13. Ends secured with 6 by ____ inch high lap plates to allow for horizontal expansion.
   14. Provide stainless steel anchor bolts.

D. Scum Baffle Plates: (Choose color)
   1. 1/4 inch nominal thickness.
   2. Color: White.
   3. Color: Turquoise.
   4. Height: 12 inches.
   5. Mounting holes: As required to attach to support brackets.
   6. Lengths as required to suit project conditions, up to 12 feet maximum each.

CONFIDENTIAL

E. Lap Plates:
1. Size: 6 by 12 inches.
2. Provide as required to secure ends of baffle plates.
3. Provide stainless steel hardware to secure baffle plates to support brackets and to lap plates.

F. Scum Baffle Support Brackets:
1. Provide at 40 inches on center for round tanks.
2. Provide at 36 inches on center for rectangular tanks.
3. Size: 3/16 inch thick, 4 inches wide, minimum.
4. Slotted to allow at least 1-1/2 inches vertical and horizontal adjustment to compensate for inaccurate anchor bolt location.

G. Assembly Hardware: (Choose type of s.s. and anchor bolts)
1. Stainless steel, Type 304.
2. Stainless steel, Type 316.
3. Provide hook anchors, 1/2 inch by 6 inches by 2 inches.
4. Provide wedge anchors, 1/2 inch by 4-1/2 inches.

PART 3 - EXECUTION

3.1 EXAMINATION
A. Verify that dimensions are correct and project conditions are suitable for installation. Do not proceed with installation until unsatisfactory conditions have been corrected.

3.2 INSTALLATION, GENERAL
A. Install products in accordance with manufacturer's instructions.
B. Ensure that products are installed plumb and true, free of warp or twist, within tolerances specified by the manufacturer and as indicated in the contract documents.
C. Install in accordance with approved shop drawings and in true and proper alignment.
D. Adjust weir plate elevation for flow indicated or as directed by the Engineer.
E. When necessary to adjust lengths of plates due to field conditions and when approved by the Engineer, seal cut or machined edges thus exposed with polyester resin. Excessive cutting will not be acceptable.

3.3 ADJUST AND CLEAN
A. Clean surfaces in accordance with manufacturer's instructions.
B. Remove trash and debris, and leave the site in a clean condition.

END OF SECTION 11204

CONFIDENTIAL

SECTION 11210
WASTEWATER PUMPS

PART 1 GENERAL

1.1 SUMMARY

A. Section Includes:
1. Submersible Sewage Pumps and accessories.
2. Dry Pit Sewage Pumps.
3. Pump Controls
4. Programmable Controller
5. Startup, Initial Testing and Operation
6. Manufacturer's Field Service
7. Testing
8. Pump Schedule

B. Related Sections:
1. Section 03300 - Cast-In-Place Concrete: Requirements for cast-in-place concrete pad.

1.2 REFERENCES

A. ASTM International:
1. ASTM A36/A36M - Standard Specification for Carbon Structural Steel.
2. ASTM A48/A48M - Standard Specification for Gray Iron Castings.
3. ASTM A123/A123M - Standard Specification for Zinc (Hot-Dip Galvanized) Coatings on Iron and Steel Products.
4. ASTM A126 - Standard Specification for Gray Iron Castings for Valves, Flanges, and Pipe Fittings.
5. ASTM A307 - Standard Specification for Carbon Steel Bolts and Studs, 60 000 PSI Tensile Strength.
6. ASTM A709/A709M - Standard Specification for Carbon and High-Strength Low-Alloy Structural Steel Shapes, Plates, and Bars and Quenched-and-Tempered Alloy.
7. ASTM D1785 - Standard Specification for Poly (Vinyl Chloride) (PVC) Plastic Pipe, Schedules 40, 80, and 120.
8. ASTM D2466 - Standard Specification for Poly (Vinyl Chloride) (PVC) Plastic Pipe Fittings, Schedule 40.
9. ASTM D2467 - Standard Specification for Poly (Vinyl Chloride) (PVC) Plastic Pipe Fittings, Schedule 80.

1.3 SYSTEM DESCRIPTION

A. Main Pump Station: Two identical constant speed submersible sewage pumps, controls, and lift-out system. Submersible level transducer mounted in wet well.

B. Office Pump Station: Two identical constant speed submersible sewage pumps, controls, and lift-out system. Submersible level transducer mounted in wet well. Pump station to be a factory built unit.

CONFIDENTIAL

C. RBC Sump Pump: One sewage pump, controls, and mechanical float switch.

1.4 PERFORMANCE REQUIREMENTS

A. Refer to pump schedule at the end of this Section for specific pump rating requirements.

B. Refer to the Section 2 for detailed control requirements

C. Main Pump Station (2 Pumps)
1. Pressure transducer to transmit an analog signal to the pump controller.
2. Pumps to cycle on/off in response to water level in wet well.
3. Pumps to operate in a lead/lag sequence.
4. Pump controller to have capability for the following set points:
   a. Low level alarm
   b. Pump stop (stops one or both pumps)
   c. Start lead Pump
   d. Start lag Pump
   e. High level alarm.
5. Lead Pump to automatically alternate with each cycle.
6. Each pump to have a manual Hand/Off/Automatic selector switch.
   a. Controls to operate as specified above when both pumps are switched to "Automatic"
   b. When one pump is switched "Off" the other pump will operate automatically as the lead pump as specified above.
   c. When a pump is switched to "Hand" it will operate independently of the level controls.
7. Controls to display instantaneous water level in the wet well
8. Controls to display instantaneous rate through flow meter.

D. Main Pump Station (Two Pumps)
1. Pressure transducer to transmit an analog signal to the PLC.
2. Pumps to cycle on/off in response to water level in the wet well.
3. Pumps to operate in a Lead/ Lag sequence.
4. PLC also to respond to the following set points:
   a. Low level alarm
   b. Pump stop (stops all pumps)
   c. Start Lead Pump
   d. Start Lag Pump
   e. High Level Alarm
5. Lead pump to automatically alternate with each pump cycle.
6. Each pump to have a Manual/Off/Automatic selector switch.
   a. Controls to operate as specified above when all pumps are switched to "Automatic"
   b. When one pump is switched "Off" the other pumps will operate automatically as the lead pump as specified above.
   c. When a pump is switched to "Manual" it will operate independently of the level controls the other pump will operate automatically as the lead pump as specified above.
7. Controls to display instantaneous water level in the wet well
8. Controls to display instantaneous rate through flow meter.
9. Controls to provide outputs to PLC Controller for alarm conditions.

CONFIDENTIAL

E. Office Pump Station (Duplex prefabricated pump station)
1. Float switches to transmit analog signals to the PLC.
2. Pumps to cycle on/off in response to the water level in the station.
3. Lead pump designation to alternate every 24 hours.
4. In the event that water reaches the alarm level the lag pump will activate and pumps will operate simultaneously for 3-4 minutes. If the level is not below the alarm point after this period the alarm warning will be sent out.

F. RBC Sump Pump
1. Mechanical float switch to control the pump.

1.5 SUBMITTALS

A. Section 01330 - Submittal Procedures: Requirements for submittals.

B. Shop Drawings:
1. Indicate the layout of the pumping equipment and appurtenances. Include dimensions required for layout of piping connecting to pumps, anchor bolts, and related construction.
2. For submersible pump provide the following information:
   a. Dimensions of the pumps, bases, and lift out systems, to determine the required position of the access doors in the precast concrete vaults.
   b. The Contractor is responsible for determining the required dimensions between pumps, which may be determined by the pump manufacturer's layout or by the piping in the valve chambers.
   c. Verify required clearances around pumps when passing through the access doors.
   d. Provide the required information to the manufacturer of the precast vaults for installation of access doors.
   e. Coordinate the hoist dimensions and socket location to allow lifting of both pumps with one hoist setup.
3. For dry-pit submersible pumps provide location of electrical junction boxes to the electrical contractor.
4. Provide layout of the control outer faces, inside faces, and arrangement of internal components. Provide wiring diagram and a legend of terminals for external wiring connections.
5. Provide layout of the PLC panel face, logic diagram, and a legend of terminals for external wiring connections.

C. Product Data:
1. Include catalog data for the pumps, level controls, control panel components, PLC unit, slide rail assembly, discharge piping, and all other products specified in this Section.
2. Include pump performance curves, electrical characteristics, bearing and seal information, and parts list.

D. Test Reports:

CONFIDENTIAL

1. Submit a written report showing that the factory pump inspections and tests have been successfully performed on each pump.
2. Submit certified hydraulic performance testing results to the Engineer prior to pump installation. Perform this testing on each pump in accordance with the Hydraulic Institute Standards 1.6 for centrifugal pumps. Hydraulic test tolerances are per Hydraulic Institute type "A" criteria and electrical performance tolerances are per NEMA MG 1 criteria. A complete hydraulic evaluation with a minimum of seven data points will be performed at nominal motor speed from zero to full flow. For variable speed pumps, perform tests at speeds to demonstrate operation at each point listed in the Pump Table at the end of this Section. Plot the data on curves reflecting the following pump characteristics:
    - head versus capacity
    - wire to water efficiency versus capacity
    - input kilowatts versus capacity
    - specified design performance point

E. Manufacturer's Installation Instructions: Submit the Manufacturer's published instructions for the wetwell, pumps, and panel systems installation procedures.

F. For the PLC, provide a summary of the operating sequences for the pump systems as specified in Article 1.4 above. Include instructions for adjusting set points and selecting operating modes.

G. Manufacturer's Certificate: Certify that all products meet or exceed the specified requirements

H. Manufacturer's Field Reports:
1. Submit a report of each visit by the Manufacturer's representative to provide technical assistance during installation.
2. Before final acceptance of the pumps, submit a start-up report for each pump to document that the pumping station operation meets the performance requirements.

1.6 CLOSEOUT SUBMITTALS

A. Section 01700 - Execution Requirements: Requirements for submittals.

B. Record the actual location of the pumping station, including the basin and control panel, on the as-built plans.

C. Submit executed certification of pumping stations after performance testing.

D. Submit spare parts list.

E. Provide the Owner with an operations and maintenance manual which contains operating and maintenance requirements for the equipment and schedule of recommended maintenance.

CONFIDENTIAL

1.7 QUALIFICATIONS

A. Manufacturer: Company specializing in manufacturing Products specified in this section with a minimum three years of documented experience.

1.8 DELIVERY, STORAGE, AND HANDLING

A. Section 01600 - Product Requirements: Requirements for transporting, handling, storing, and protecting products.

B. Provide temporary end caps and closures on piping and fittings. Maintain in place until installation.

C. Protect system pieces from entry of foreign materials and water by temporary covers, completing sections of work, and isolating parts of completed system.

D. Accept system components on-site in the Manufacturer's original containers or configuration. Inspect for damage.

E. Store sensitive materials for field assembly in a dry area in original shipping containers.

1.9 ENVIRONMENTAL REQUIREMENTS

A. Section 01600 - Product Requirements: Environmental conditions affecting products on site.

B. Do not install the pump station wetwell or valve vault when the bedding is wet or frozen. Dewater the excavation to keep it dry.

PART 2 PRODUCTS

2.1 PRESSURE TRANSDUCER

A. Submersible Pressure Transducers: Provide materials compatible with domestic wastewater, at temperatures from 32 to 100 degrees Fahrenheit, with a pressure range from 0 to 15 psi. Provide with a submersible cable of sufficient length to reach the junction boxes shown on the drawings and suitable for suspending transducers in the stilling wells as indicated.

2.2 PUMPS

A. Volute: ASTM A48/A48M, Class 30, cast iron.

B. Motor Housing: ASTM A48/A48M, Class 30, cast iron.

C. Seal Plate: ASTM A48/A48M, Class 30, cast iron.

D. Impeller: ASTM A48/A48M, Class 30, cast iron of the types scheduled in the Pump Table at the end of this section, dynamically balanced.

E. Shaft: 416 Stainless steel.

CONFIDENTIAL

F. Hardware: 300 Series stainless steel.

G. Paint: Air dry enamel.

H. Seal:
1. Design: tandem mechanical, oil filled reservoir.
2. Material: Rotating faces - carbon, stationary faces - ceramic.

I. Cable Entry: Pressure grommet for sealing and strain relief.

J. Upper Bearing:
1. Design: single row, ball, or roller.
2. Lubrication: oil.
3. Load: radial.
4. Bearing Life: 40,000 hours.

K. Lower Bearing:
1. Design: single row ball or oil.
2. Lubrication: oil.
3. Load: radial and thrust.
4. Bearing Life: 50,000 hours.

L. Motor:
1. Design: NEMA L-240 volt, single phase
2. Insulation: Class F.

2.3 PUMP CONTROL PANEL

A. Manufacturers:
1. Provide control panel from the pump manufacturer.

B. Product Description.
1. Factory fabricated, self-contained duplex including low level alarm, common stop, start lead pump, start lag pump, and high level alarms motor control panel at remote location with short circuit and overload protection for pumps and alternator to alternate pump duty between pumps on successive cycles or switch operation of pumps on pump failure. Include Green run lights to indicate status of each pump.

C. Enclosure: NEMA 4X, outdoor mounting, steel gray polyester powder finish, padlock hasp/staple with captive stainless screws for door closure. Front door with continuous piano hinge with removable pin. Aluminum panel drilled and tapped, machine screw mounted components.

D. Power Handling: Furnish main lugs sized for connecting incoming supply power. Do not use motor circuit breaker side lugs as main lugs.

E. Motor Circuit Breaker: For short circuit protection. Thermal magnetic breakers to comply with US DoD W-C-375/1A NOT 1, Class 2 Breakers.

CONFIDENTIAL

F. Starter: Solid state soft start to reduce inrush current at startup. Provide auxiliary dry contacts that close when each pump is running.

G. Overload Relay: Integral to solid state starter.

H. Magnetic Motor Circuit Protectors: Provide instantaneous clearing of faults to a minimum of 10,000 amperes, RMS, symmetrical. Adjustable instantaneous trip setting.

I. Switch: Hand-Off-Automatic, 1/2 inch NEMA 1.

J. Light: Pump motor run, 1/2 inch NEMA 1.

K. Hour Meters: 5 digit.

L. Control voltage: 120 volt obtained from one line and neutral wire.

M. Control circuit protection: 15 ampere circuit breaker.

N. Generator Block Heater Circuit protection: 20 ampere, 1 pole breaker in panel.

O. Lighting circuit breaker: 20 ampere, 1 pole for remote site light

P. Receptacle circuit breaker: 20 ampere, 1 pole for receptacle in panel

Q. Receptacle: NEMA 5-20R GFCI Convenience receptacle

R. Terminal Strip: Box lugs for wiring.

S. Wiring: Color coded to NEC requirements; black power wiring, red numbered control wiring, white numbered neutral wiring, green ground wiring.

T. Alternator: For duplex, automatic.

U. Control Relays: Control relays, 3PDT, 10A, 120VAC, clear dust covers, encapsulated coils.

V. Float control relays: Intrinsically safe.

W. LED Indicators: Indicator lights adjacent to relays to indicate coil is energized.

X. Alarm lights
1. Exterior Alarm Beacon: NEMA 4X red translucent plastic, vandal resistant globe, 40 watt lamp.
2. Red indicators mounted on exterior of panel as described below.

Y. Seal Failure
1. Moisture sensing relays to disable affected pump and activate alarm as described below.

Z. Overtemp Sensor:
1. Relay in control panel activated by contacts in motor, to shut down motor and activate alarm as described below. Relay to automatically reset after motor has

CONFIDENTIAL

cooled sufficiently, but alarm indication to remain activated until manually acknowledged.

AA. Terminal Strip Connectors: Provide for the following:
1. External alarm light.
2. Power Monitor.
3. Pump monitors.

BB. Power Failure: Pump lockout and alarm circuitry for power failure, phase loss, low voltage, seal failure, and pump over-temperature.

CC. Lightning Arrestor:
1. Manufacturers:
a. Delta Lightning Arrestors, Inc.
b. Substitutions: Section 01600 - Product Requirements.

DD. Alarm Indications and Outputs.
1. High Level alarm: Red indicating light on the panel face, output to common pump station alarm, and separate output to telephone autodialer. Manual acknowledge.
2. Low Level alarm: Red indicating light on panel face, output to common pump station alarm, and separate output to telephone autodialer. Manual acknowledge.
3. Pump over temperature alarm: Separate red indicating lights on panel face, output to common pump station alarm, and separate output to telephone autodialer. Manual Acknowledge.
4. Pump Seal Failure alarm: Separate red indicating lights on panel face, output to common pump station alarm, and separate output to telephone autodialer.
5. Common Pump Station Alarm: Activates exterior alarm beacon, and activates a dry contact that closes to signal Communications System.

EE. Communication Outputs: Provide outputs as listed below, for communication with the wireless system connected to the treatment plant.
1. Dry contact in Motor starters to signal the starting of each pump.
2. Dry contact to signal a common pump station alarm.
3. Flow meter reading and tantalization of gallons pumped from station.

2.4 ACCESSORIES

A. Anchor Bolts, Nuts, and Washers: Stainless Steel.

2.5 SOURCE QUALITY CONTROL

A. Section 01400 - Quality Requirements: Testing, inspection and analysis requirements.

B. Perform the following factory inspections and tests:
1. Motor voltage and frequency check as shown on the name plates.
2. Motor and cable insulation test for moisture content or insulation defects in accordance with UL criteria.
3. Submerged pump run test to verify that the pumps meet the hydraulic performance requirements as scheduled.

CONFIDENTIAL

PART 3 EXECUTION

3.1 EXAMINATION

A. Section 01300 - Administrative Requirements: Verification of existing conditions before starting work.

B. Verify inlet and discharge piping connection are of the size, location, and elevation as shown on the Drawings.

3.2 PREPARATION

A. Verify locations and elevations of connecting piping.

3.3 PUMP INSTALLATION

A. Install pumps including fittings, brackets, discharge piping, valves, rail assemblies, lifting devices, and other appurtenances per the Manufacturer's requirements and instructions. Wire pumps to the junction box according to the Manufacturer's wiring diagrams.

3.4 CONTROL PANEL INSTALLATION

A. Mount and wire the control panel for the pumping station at the location shown on the Drawings.

3.5 STATION STARTUP, INITIAL TESTING AND OPERATION

A. Notify the Engineer 7 days prior to the flow rate testing.

B. Provide start-up and initial testing of the pump station system. Coordinate and operate pumps in conjunction with other construction.

C. Hydraulically test the pump station to the performance requirements by receiving, pumping, and discharging 500 gallons of water to/from basin.

D. Correct failures during test by repairing or replacing malfunctioning parts or equipment or faulty workmanship, regardless of the cause.

E. After correcting failures caused by defective equipment, material, or faulty workmanship, retest until the failures are eliminated.

F. Confirm that the general sequencing of the pump and float operations at the basin and the control panel are in accordance with the performance requirements.

G. Document and certify the pump station start-up results in a startup report to the Engineer.

3.6 MANUFACTURER'S FIELD SERVICE

A. Section 01400 - Quality Requirements: Requirements for Manufacturer's field services.

B. Furnish factory trained representatives and field technical assistance during the following periods of pumping station installation:

CONFIDENTIAL

1. Unloading of station materials and components.
2. Start-up, testing, and demonstration of pumping station operation including basin components, pump system, and control panel.

3.7 ADJUSTING

A. Section 01700 - Execution Requirements: Requirements for starting and adjusting.

B. Adjust pump, accessories and controls so that the station operates to the performance requirements and in accordance with the Specifications.

3.8 DEMONSTRATION

A. Section 01700 - Execution Requirements: Requirements for demonstration and training.

B. Demonstrate the operation of the pumps and controls.

3.9 PROTECTION OF FINISHED WORK

A. Section 01700 - Execution Requirements: Requirements for protecting finished Work.

3.10 TESTING

B. Test piping in accordance with Section 02952.

CONFIDENTIAL

3.11 PUMP SCHEDULE

	Pump Location	Main Pump Station	Office Pump Station	WWTF Recirculation Pumps
A	Number of Pumps	2	2	1
B	Service	Submersible	Submersible	Submersible
C	Type of Operation	Constant Speed 1750 RPM	Constant Speed 1725 RPM	Constant Speed 3450 RPM
D	Design Capacity	150 GPM @ 54' TDH	11 GPM @ 17' TDH @1725 RPM	80 GPM @ 10' TDH @ 3450 RPM
E	Min shutoff head (ft)	45	45	5.5
F	Solids Capability (in)	3	n/a	2
G	Impeller Type	Enclosed two vane	Enclosed two vane	Vortex
H	Motor Horsepower	7.5	1	.5
I	Discharge connection (in)	4	1.25	2
J	Motor NEMA Code	L	L	L
K	Electrical Characteristics	240V 3-phase	240V 1-phase	240V 1-phase

END OF SECTION 11210

CONFIDENTIAL

CONFIDENTIAL

APPENDIX A

GENERAL INFORMATION

- **Location Map**
- **DEC Approval of PER**
- **Application Form D- SPDES Permit**

CONFIDENTIAL

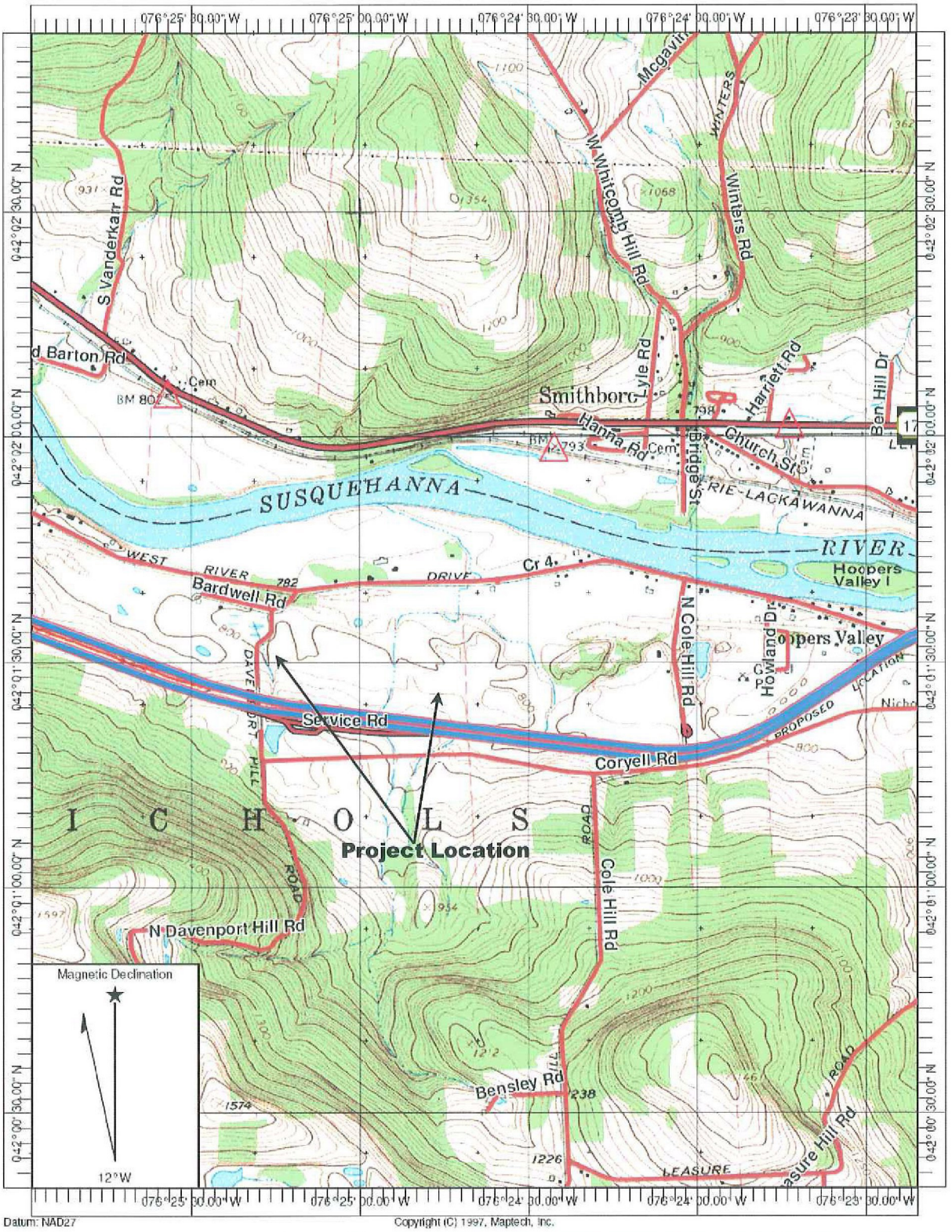

Larson Design Group

Tioga Downs
Wastewater System Improvements Project
in the Town of Nichols
Tioga County, New York

Location Map

Barton USGS Quad Map

CONFIDENTIAL

Greg Cummings

From: James Burke [jeburke@gw.dec.state.ny.us]
Sent: Friday, June 19, 2009 1:52 PM
To: Greg Cummings
Cc: Meghan Gilbert
Subject: Tioga Downs WWTP- Potential effluent limits

Greg, I have received information from our Water Quality review section in Albany regarding a proposed direct discharge to the Susquehanna River from this facility. As I thought, for a design flow of 75,000 gpd, secondary standards and treatment requirements, with seasonal disinfection, would apply for this direct discharge. BOD and TSS concentrations of 30 mg/l and corresponding mass limits would be required. Chesapeake Bay program requirements would stay the same as in the draft permit, with initial monitoring only for Total N and Phosphorus. UV disinfection would be needed on as seasonal basis as noted. The Design needs to consider the location of the outfall and dispersal of the effluent with regard to public contact(e.g. nearby boat launch). These limits will need to be incorporated into a revised draft SPDES Permit if this discharge option is chosen. Certain elements of the current Design could be significantly impacted if this discharge option is selected, and a re-submittal of Design documents would be required . If there are any questions, please email or call 315-426-7506.

CONFIDENTIAL

91-19-1 (2/85)

NEW YORK STATE DEPARTMENT OF ENVIRONMENTAL CONSERVATION

APPLICATION FORM "D"

for a State Pollutant Discharge Elimination System (SPDES) Permit

(A SPDES Application When Signed by a Permit Issuing Official Becomes a SPDES Permit)

PLEASE PRINT OR TYPE

APPLICATION TYPE	IF RE-ISSUANCE OR MODIFICATION, GIVE PREVIOUS NUMBER
☐ New ☐ Re-Issuance ☑ Modification	NY --- 024 4881

OWNER'S NAME (Corporate, Partnership, Individual)	TYPE OF OWNERSHIP
Tioga Downs	☑ Corporate ☐ Individual ☐ Partnership ☐ Public

OWNER'S MAILING ADDRESS (Street. City. State. Zip Code)
2384 West River Road, Nichols, NY 13812

REFER ALL CORRESPONDENCE TO: (Name, Title and Address)	TELEPHONE NUMBER
Pete Savage	(607) 699-7581

FACILITY NAME	FACILITY LOCATION (Street or Road)	CITY, TOWN OR VILLAGE
Tioga Downs	West River Road	Nichols

COUNTY	GIVE EXPLICIT DIRECTIONS TO LOCATION
Tioga	Exit 62 off I-86, right onto West River Road

NATURE OF BUSINESS OR FACILITY	POPULATION SERVED (See Instructions)
Racino	136 Room Hotel and Rooms

FREQUENCY OF DISCHARGE

All Year? ☑ Yes ☐ No If No, Specify Number of Months — All Week? ☑ Yes ☐ No If No, Specify Number of Days

DOES YOUR DISCHARGE CONTAIN OR IS IT POSSIBLE FOR YOUR DISCHARGE TO CONTAIN ONE OR MORE OF THE FOLLOWING SUBSTANCES **ADDED** AS A RESULT OR YOUR OPERATIONS, ACTIVITIES OR PROCESSES?

Please Check ☐ Aluminum ☐ Ammonia ☐ Beryllium ☐ Cadmium ☐ Chlorine ☐ Chromium ☐ Copper ☐ Cyanide ☐ Grease ☐ Lead ☐ Mercury ☐ Nickel ☐ Oil ☐ Phenols ☐ Selenium ☐ Zinc ☑ None of These

DISCHARGE DATA (Use additional forms, if necessary) (See Instructions)

OUTFALL NO.		TYPE OF WASTE	TYPE OF TREATMENT	DESIGN FLOW
1	☑ Proposed ☐ Existing ☐ Replacement ☐ Expansion	Sanitary	Wastewater Treatment Facility	75,000 Gal/Day

SURFACE DISCHARGE	If YES, Name of Receiving Waters	Classification	Waters Index Number
☑ Yes ☐ No	Susquehanna River	B	

SUBSURFACE DISCHARGE	If YES, Name of nearest surface waters	Distance	SOIL TYPE	Depth to Water Table
☐ Yes ☑ No		2200 Ft.	Hgn	>25'

OUTFALL NO.		TYPE OF WASTE	TYPE OF TREATMENT	DESIGN FLOW
	☐ Proposed ☐ Existing ☐ Replacement ☐ Expansion			Gal/Day

SURFACE DISCHARGE	If YES, Name of Receiving Waters	Classification	Waters Index Number
☐ Yes ☐ No			

SUBSURFACE DISCHARGE	If YES, Name of nearest surface waters	Distance	SOIL TYPE	Depth to Water Table
☐ Yes ☐ No		Ft.		

OUTFALL NO.		TYPE OF WASTE	TYPE OF TREATMENT	DESIGN FLOW
	☐ Proposed ☐ Existing ☐ Replacement ☐ Expansion			Gal/Day

SURFACE DISCHARGE	If YES, Name of Receiving Waters	Classification	Waters Index Number
☐ Yes ☐ No			

SUBSURFACE DISCHARGE	If YES, Name of nearest surface waters	Distance	SOIL TYPE	Depth to Water Table
☐ Yes ☐ No		Ft.		

I hereby affirm under penalty of perjury that the information provided on this form and any attached supplemental forms is true to the best of my knowledge and belief. False statements made herein are punishable as a Class A misdemeanor pursuant to section 210.45 of the Penal Law.

APPLICANTS SIGNATURE (see Instructions)	DATE	PRINTED NAME	TITLE
Pete Savage	9/2/09	Pete Savage	President and General Manager

PERMIT VALIDATION SECTION

(Department of Environmental Conservation Use Only)

This SPDES permit is issued in compliance with Title 8 of Article 17 of the Environmental Conservation Law of New York State and in compliance with the provisions of the Federal Water Pollution Control Act, as amended by the Federal Water Pollution Control Act Amendments of 1972, P.L. 92-500, October 18, 1972 (33 U.S.C. §1251 et. seq.) (hereinafter referred to as "the Act"), and subject to the attached conditions.

Signature of Permit Issuing Agent _____ Date _____

APPLICATION NUMBER: NY --

EFFECTIVE DATE | EXPIRATION DATE

ATTACHMENTS:

CARD	Type Est.	Type Own	SIC CODE	# Cut Falls	Dis. Class	CARD	Region	County	Major Basin	Sub Basin	Compact Area	CARD	Latitude	Longitude	CARD	Lim Ind
1	66	68	70	74	76	3	71	72	74	76	78	6	53	59	7	57

CONFIDENTIAL

APPENDIX B

EXISTING FLOWS

CONFIDENTIAL

Summary of Wastewater Flow to Septic System #1.

2007 Date	April-07 Flow	May-07 Date	May-07 Flow	June-07 Date	June-07 Flow	July-07 Date	July-07 Flow
4/1	16,669	5/1	7,713	6/1	9,500	7/1	16,013
4/2	9,631	5/2	9,628	6/2	15,744	7/2	18,000
4/3	5,459	5/3	11,979	6/3	15,797	7/3	18,000
4/4	5,592	5/4	9,378	6/4	13,770	**7/4**	**31,765**
4/5	12,684	5/5	13,920	6/5	7,664	7/5	20,964
4/6	9,909	5/6	15,342	6/6	12,450	7/6	10,666
4/7	15,555	5/7	9,625	6/7	12,450	7/7	17,764
4/8	16,226	5/8	7,657	6/8	12,450	7/8	18,412
4/9	8,243	5/9	14,862	6/9	12,450	7/9	14,162
4/10	10,330	5/10	16,390	6/10	16,730	7/10	9,826
4/11	10,330	5/11	16,350	6/11	12,163	7/11	8,000
4/12	13,292	5/12	20,477	6/12	7,050	7/12	18,000
4/13	8,912	5/13	17,287	6/13	7,254	7/13	18,000
4/14	**17,402**	5/14	19,172	6/14	10,278	7/14	18,000
4/15	15,893	5/15	8,340	**6/15**	**24,829**	7/15	18,449
4/16	7,747	5/16	16,916	6/16	19,854	7/16	18,550
4/17	2,583	5/17	11,987	6/17	10,455	7/17	11,313
4/18	5,673	5/18	19,951	6/18	10,422	7/18	17,820
4/19	14,146	5/19	19,064	6/19	6,722	7/19	10,320
4/20	9,088	5/20	18,160	6/20	6,911	7/20	19,139
4/21	12,888	5/21	13,212	6/21	17,443	7/21	17,000
4/22	14,279	5/22	20,158	6/22	7,749	7/22	17,010
4/23	9,583	5/23	5,854	6/23	15,972	7/23	12,713
4/24	7,797	**5/24**	**21,816**	6/24	20,236	7/24	11,345
4/25	7,623	5/25	14,945	6/25	14,177	7/25	14,330
4/26	12,000	5/26	8,750	6/26	7,427	7/26	14,330
4/27	12,406	5/27	8,750	6/27	12,400	7/27	18,564
4/28	13,215	5/28	15,265	6/28	12,400	7/28	16,775
4/29	14,679	5/29	11,567	6/29	12,400	7/29	19,198
4/30	9,722	5/30	9,500	6/30	12,400	7/30	9,554
		5/31	9,500			7/31	10,000
Total	**329,556**		**423,515**		**377,547**		**493,982**
Average	10,985		13,662		12,585		15,935
Max Daily	17,402		21,816		24,829		31,765

CONFIDENTIAL

Summary of Wastewater Flow to Septic System #1.

August-07		2007	September-07		October-07		November-07	
Date	Flow	Date		Flow	Date	Flow	Date	Flow
8/1	7,976		9/1	17,813	10/1/2007	9219	11/1/2007	8205
8/2	10,619		9/2	17,813	10/2/2007	7031	11/2/2007	10496
8/3	24,371		9/3	13,338	10/3/2007	10930	11/3/2007	15846
8/4	17,544		9/4	10,196	10/4/2007	8836	11/4/2007	9790
8/5	13,524		9/5	11,748	10/5/2007	12979	11/5/2007	8759
8/6	9,415		9/6	8,890	10/6/2007	15313	11/6/2007	5956
8/7	11,345		9/7	16,870	10/7/2007	11257	11/7/2007	8992
8/8	11,718		9/8	17,280	10/8/2007	12211	11/8/2007	7439
8/9	8,945		9/9	14,150	10/9/2007	8742	11/9/2007	11000
8/10	16,176		9/10	9,726	10/10/2007	12253	11/10/2007	11000
8/11	16,455		9/11	8,673	10/11/2007	9564	11/11/2007	12000
8/12	16,455		9/12	11,730	10/12/2007	1300	11/12/2007	8619
8/13	9,786		9/13	9,084	10/13/2007	13156	11/13/2007	6446
8/14	7,855		**9/14**	**21,560**	10/14/2007	9989	11/14/2007	9452
8/15	11,580		9/15	14,072	10/15/2007	9344	11/15/2007	17447
8/16	**24,157**		9/16	10,320	10/16/2007	7335	11/16/2007	10886
8/17	18,765		9/17	8,500	10/17/2007	10300	11/17/2007	10926
8/18	20,137		9/18	8,500	10/18/2007	10300	11/18/2007	7883
8/19	20,540		9/19	11,810	10/19/2007	13564	11/19/2007	7384
8/20	16,650		9/20	8,903	10/20/2007	14706	11/20/2007	6678
8/21	16,650		9/21	12,426	10/21/2007	9888	11/21/2007	9029
8/22	12,147		9/22	12,282	10/22/2007	10390	11/22/2007	7185
8/23	9,400		9/23	8,900	10/23/2007	7364	11/23/2007	11517
8/24	15,294		9/24	10,209	10/24/2007	11698	11/24/2007	12887
8/25	16,840		9/25	9,300	10/25/2007	8172	11/25/2007	7773
8/26	14,086		9/26	9,300	10/26/2007	10649	11/26/2007	7481
8/27	9,094		9/27	8,567	10/27/2007	14000	11/27/2007	7013
8/28	7,646		9/28	12,487	10/28/2007	10000	11/28/2007	8563
8/29	11,901		9/29	12,500	10/29/2007	7900	11/29/2007	7162
8/30	17,434		9/30	13,790	10/30/2007	8000	11/30/2007	9634
8/31	17,205				10/31/2007	9618		
Total	**441,710**			**360,737**		**316,008**		**283,448**
Average	14,249			12,025		10,194		9,448
Max Daily	24,371			21,560		15,313		17,447

CONFIDENTIAL

Summary of Wastewater Flow to Septic System #1.

December-07		January-08		February-08		March-08	
Date	Flow	Date	Flow	Date	Flow	Date	Flow
12/1/2007	9944	1/1/2008	9519	2/1/2008	14000	3/1/2008	14145
12/2/2007	3706	1/2/2008	6800	2/2/2008	10800	3/2/2008	11262
12/3/2007	7039	1/3/2008	7000	2/3/2008	9628	3/3/2008	11302
12/4/2007	4584	1/4/2008	7000	2/4/2008	7632	3/4/2008	3598
12/5/2007	7100	1/5/2008	12600	2/5/2008	7320	3/5/2008	8142
12/6/2007	7128	1/6/2008	11300	2/6/2008	7719	3/6/2008	8830
12/7/2007	9201	1/7/2008	7800	2/7/2008	7911	3/7/2008	10081
12/8/2007	10504	1/8/2008	6133	2/8/2008	13377	3/8/2008	11957
12/9/2007	4850	1/9/2008	10008	2/9/2008	14209	3/9/2008	10327
12/10/2007	5389	1/10/2008	7753	2/10/2008	9088	3/10/2008	8633
12/11/2007	5338	1/11/2008	10781	2/11/2008	7129	3/11/2008	7267
12/12/2007	9444	1/12/2008	13698	2/12/2008	4092	3/12/2008	9484
12/13/2007	1980	1/13/2008	8153	2/13/2008	5227	3/13/2008	7987
12/14/2007	8828	1/14/2008	6730	2/14/2008	11808	3/14/2008	10994
12/15/2007	6000	1/15/2008	5630	2/15/2008	11303	3/15/2008	15771
12/16/2007	5000	1/16/2008	10455	2/16/2008	12300	3/16/2008	9281
12/17/2007	5000	1/17/2008	6645	2/17/2008	11900	3/17/2008	9320
12/18/2007	3706	1/18/2008	11059	2/18/2008	12100	3/18/2008	7094
12/19/2007	8634	1/19/2008	12911	2/19/2008	7085	3/19/2008	8944
12/20/2007	6756	1/20/2008	7959	2/20/2008	9373	3/20/2008	7022
12/21/2007	9519	1/21/2008	9816	2/21/2008	9119	3/21/2008	12265
12/22/2007	9519	1/22/2008	6255	2/22/2008	7266	3/22/2008	14360
12/23/2007	9519	1/23/2008	9699	2/23/2008	1720	3/23/2008	11290
12/24/2007	9519	1/24/2008	7097	2/24/2008	9400	3/24/2008	9707
12/25/2007	9519	1/25/2008	10808	2/25/2008	8037	3/25/2008	8267
12/26/2007	9519	1/26/2008	17900	2/26/2008	3556	3/26/2008	8134
12/27/2007	9519	1/27/2008	10100	2/27/2008	8018	3/27/2008	7093
12/28/2007	9519	1/28/2008	5059	2/28/2008	7249	3/28/2008	12813
12/29/2007	9519	1/29/2008	5619	2/29/2008	9414	3/29/2008	14887
12/30/2007	9519	1/30/2008	8802			3/30/2008	10295
12/31/2007	9519	1/31/2008	8129			3/31/2008	6917
Total	**234,840**		**279,218**		**257,780**		**307,469**
Average	7,575		9,007		8,889		9,918
Max Daily	10,504		17,900		14,209		15,771

CONFIDENTIAL

Summary of Wastewater Flow to Septic System #1.

April-08		May-08		June-08		July-08		August-08	
Date	Flow	Date	Flow	Date	Flow	Date	Flow	Date	Flow
4/1/2008	7917	5/1/2008	8945	6/1/2008	11850	7/1/2008	7433	8/1/2008	14744
4/2/2008	9609	5/2/2008	22000	6/2/2008	6888	7/2/2008	9958	8/2/2008	16919
4/3/2008	7733	5/3/2008	30000	6/3/2008	6609	7/3/2008	19991	8/3/2008	17183
4/4/2008	8900	5/4/2008	15198	6/4/2008	8647	7/4/2008	20020	8/4/2008	4810
4/5/2008	14600	5/5/2008	7512	6/5/2008	8078	7/5/2008	16136	8/5/2008	6669
4/6/2008	8247	5/6/2008	6934	6/6/2008	12035	7/6/2008	12480	8/6/2008	10253
4/7/2008	7005	5/7/2008	15393	6/7/2008	21110	7/7/2008	7569	8/7/2008	15695
4/8/2008	7435	5/8/2008	7731	6/8/2008	11346	7/8/2008	6922	8/8/2008	15434
4/9/2008	8458	5/9/2008	14300	6/9/2008	7319	7/9/2008	9691	8/9/2008	16990
4/10/2008	7087	5/10/2008	18461	6/10/2008	5822	7/10/2008	9042	8/10/2008	13302
4/11/2008	11016	5/11/2008	20974	6/11/2008	8755	7/11/2008	24000	8/11/2008	7773
4/12/2008	13962	5/12/2008	7850	6/12/2008	7610	7/12/2008	15200	8/12/2008	7539
4/13/2008	10433	5/13/2008	7406	6/13/2008	13067	7/13/2008	22048	8/13/2008	10358
4/14/2008	9815	5/14/2008	8641	6/14/2008	15214	7/14/2008	9293	8/14/2008	8916
4/15/2008	6001	5/15/2008	8218	6/15/2008	20274	7/15/2008	6089	8/15/2008	16707
4/16/2008	15044	5/16/2008	14535	6/16/2008	7141	7/16/2008	10167	8/16/2008	18709
4/17/2008	7960	5/17/2008	17287	6/17/2008	6927	7/17/2008	9146	8/17/2008	15068
4/18/2008	9744	5/18/2008	13340	6/18/2008	11465	7/18/2008	16100	8/18/2008	9059
4/19/2008	12109	5/19/2008	7186	6/19/2008	8414	7/19/2008	15300	8/19/2008	8388
4/20/2008	8008	5/20/2008	5815	6/20/2008	14083	7/20/2008	12930	8/20/2008	12174
4/21/2008	7551	5/21/2008	9343	6/21/2008	16139	7/21/2008	7866	8/21/2008	9610
4/22/2008	7320	5/22/2008	8950	6/22/2008	13003	7/22/2008	6582	8/22/2008	15734
4/23/2008	8239	5/23/2008	12547	6/23/2008	12500	7/23/2008	9829	8/23/2008	17073
4/24/2008	7037	5/24/2008	16944	6/24/2008	7104	7/24/2008	9744	8/24/2008	15241
4/25/2008	17400	5/25/2008	23488	6/25/2008	9670	7/25/2008	14419	8/25/2008	8763
4/26/2008	14300	5/26/2008	9511	6/26/2008	9743	7/26/2008	15023	8/26/2008	7092
4/27/2008	10240	5/27/2008	5440	6/27/2008	14471	7/27/2008	16519	8/27/2008	11032
4/28/2008	9843	5/28/2008	8511	6/28/2008	16080	7/28/2008	8048	8/28/2008	19586
4/29/2008	7585	5/29/2008	20326	6/29/2008	12870	7/29/2008	6126	8/29/2008	15878
4/30/2008	8591	5/30/2008	11817	6/30/2008	7760	7/30/2008	10205	8/30/2008	16183
		5/31/2008	15933			7/31/2008	8411	8/31/2008	15650
Total	**289,189**		**400,536**		**331,994**		**372,287**		**398,532**
Average	9,640		12,921		11,066		12,009		12,856
Max Daily	17,400		30,000		21,110		24,000		19,586

CONFIDENTIAL

APPENDIX C

PROPOSED FLOWS

CONFIDENTIAL

Proposed Wastewater Flow Rates for Tioga Downs Hotel and Racino Expansion

Location	Description	Value	Unit	Floor Area Per Occupant (SF) *	Occupancy	Design Flow Rate/ Unit (gpd) **	Design Flow Rate (gpd)	Organic Loading Rate/(lbs. BODs per day)
Ground Floor	Pre-Function Area ****	1,702	SF	15	113	16	1,815	7
	Function Room 1 and 2 *****	12,000	SF	15	800	16	12,800	48
	Break-out Room (1 and 2)	2,058	SF	15	137	16	2,195	8
	Restaurant/Kitchen	250	Seats	NA	NA	40	10,000	38
	Breakfast Area	32	Seats	NA	NA	40	1,280	5
	Administrative Offices	822	SF	NA	NA	0.1	82	0
Second Floor	Spa/Exercise Room ***	3,355	SF	NA	50	10	500	2
	Swimming Pool ***	2,705	SF	NA	50	10	500	2
	Hotel Rooms ******	16	Rooms	NA	NA	96	1,536	6
	Administrative Offices	1,550	SF	NA	NA	0.1	155	1
Third Floor	Hotel Rooms ******	30	Rooms	NA	NA	96	2,880	11
Fourth Floor	Hotel Rooms ******	30	Rooms	NA	NA	96	2,880	11
Fifth Floor	Hotel Rooms ******	30	Rooms	NA	NA	96	2,880	11
Sixth Floor	Hotel Rooms ******	30	Rooms	NA	NA	96	2,880	11
Gaming Facility Expansion****	250 Additional Machines	30%	Existing ADF	NA	NA	NA	3,405	16
						TOTAL	45,789	176

* Floor area per occupant taken from 2007 Building Code of New York State Table 1004.1.2.
** Flow Rates and BOD loading rates taken from Goldstein and Moberg, 1973
*** Assumes 50 persons maximum will be using the pool and the spa/exercise room at any one time.
**** Assumes the Pre-Function Area will be a place where occupants stand, talk and drink before the function, similar to a bar.
***** Assumes the function rooms will hold conferences where people can sit and eat, like a restaurant
****** Assumes 2 people per hotel room

Existing Wastewater Flow Rates for the Tioga Downs Facility

Month	ADF (gpd)	Max. Daily Flow (gpd)	
Apr-07	10,985	17,402	
May-07	13,662	21,816	
Jun-07	12,585	24,829	*
Jul-07	15,935	31,765	*
Aug-07	14,249	24,371	*
Sep-07	12,025	21,560	
Oct-07	10,194	15,313	
Nov-07	9,448	17,447	
Dec-07	7,575	10,504	
Jan-08	9,007	17,900	
Feb-08	8,889	14,209	
Mar-08	9,918	15,771	
Apr-08	9,640	17,400	
May-08	12,921	30,000	
Jun-08	11,066	21,110	
Jul-08	12,009	24,000	
Aug-08	12,856	19,586	
Average	11,351	20,293	

Existing ADF	11,351
Existing Max 3 Month Ave*	26,988
Existing MDF	31,765
Existing PF (Max. Day) - Gaming Facility	2.8
Existing PF (Max. Day) - Hotel	1.2

Existing Gaming Facility	27,000	gpd
Existing Office (Estimated)	2,000	gpd
Proposed Improvements	46,000	gpd
Design Flow	75,000	gpd

Calculated by CBB 4/24/2008
Checked by GMC 9/17/2008

CONFIDENTIAL

APPENDIX D

MAIN PUMP STATION

CONFIDENTIAL

Pump Station Cycle Time

PRIMARY PUMP STATION
TIOGA DOWNS RACINO

Design ADF	75,000	gpd	
Design ADF	52	gpm	
Design Peak Factor (Pf)	2.5		
Design PIF	187,500	gpd	
Design PIF (15 hour day)	208	gpm	
Design Pump Capacity	150	gpm	
Number of Alternating Pumps	2		
Wet Well Inside Diameter	6	feet	
Wet Well Volume per V.F.	211	gal/VF	
Selected Distance Between Pump On and Off	3.5	ft	
Selected Working Volume	740.22	gal	
Cycle Time, ADF	22	minutes=	3 starts/hour
Cycle Time PDF (two pumps running)	27	minutes=	3 starts/hour
Peak Daily Pumping Time, ADF	181	minutes per day	

Forcemain Internal Diameter (4" HDPE)	3.87	inches
Velocity @ selected pump Q (150 gpm)	4.08	ft/s
Velocity @ selected pump Q (75 gpm)	2.04	ft/s
Velocity @ selected pump Q (300 gpm)	8.17	ft/s

MADE BY: LTZ
CHECKED BY: GMC

CONFIDENTIAL

TIOGA WWTF - Final Calculations
Pump Station 1

Calculated by MCB 8/23/2008
Checked by CBB 9/8/2008

Basis of Design

DESIGNED pumps have a OPERATING POINT OF 150gpm EACH @ 54' TDH
USING 2 VFD PUMPS

Determiniation of System Curve

1 Calculate friction losses in the Pump Station piping and the force main to the receiving manhole
2 Determine static head based on survey information and the desired operating elevations in the wet well

For piping friction, use the Hazen Williams Equation

h= 10.44(L)(Q^1.852)/(C^1.852)(d^4.8655)
h= feet L= Feet
Q= gpm C=130 FOR DI
d= inches C=145 FOR HDPE

Use Cameron Hydraulic Data for "k" factors for minor losses
Assume for design that all ductile iron piping has a C factor of 130.
Assume for design that all HDPE piping has a C factor of 145.

Friction losses in the pump station piping and in the valve vault
Use 4" piping and valves. HDPE pipe and ductile iron fittings.

Piping Takeoff for piping at each pump (DUCTILE IRON PIPE AND FITTINGS IN PUMP STATION WET WELL)

	K	L
Discharge Side of Pump		
90 degree bend	0.45	
Length of Vertical Piping		10
90 degree bend	0.45	
Length of Horizontal Piping		20
4" Plug Valve	0.12	
4" Check Valve	1.5	
90 degree bend	0	
Tee Branch Flow	0.9	
	3.42	30

Calculate Friction in Piping at each pump

h=10.44(L)(Q^1.852)/(C^1.852)(d^4.8655)
L= Feet
Q= gpm C= 130 DUCTILE IRON
d= inches

CONFIDENTIAL

Flow (gpm)	Flow (cfs)	Pipe Size	Area (SF)	Dia (in)	V ft/s	v^2/2g	Total K	Total L	C	Pipe Friction (ft)	Minor Losses (ft)	Tot Friction (ft)
0	0.000	4	0.0818	3.874	0.00	0.00	3.42	30	130	0.0000	0.000	0.000
50	0.111	4	0.0818	3.874	1.36	0.03	3.42	30	130	0.0734	0.098	0.172
100	0.223	4	0.0818	3.874	2.72	0.12	3.42	30	130	0.2649	0.394	0.658
150	0.334	4	0.0818	3.874	4.08	0.26	3.42	30	130	0.5613	0.885	1.447
200	0.445	4	0.0818	3.874	5.44	0.46	3.42	30	130	0.9563	1.574	2.531
250	0.557	4	0.0818	3.874	6.81	0.72	3.42	30	130	1.4457	2.460	3.905
300	0.668	4	0.0818	3.874	8.17	1.04	3.42	30	130	2.0285	3.542	5.568
350	0.780	4	0.0818	3.874	9.53	1.41	3.42	30	130	2.6960	4.821	7.517
400	0.891	4	0.0818	3.874	10.89	1.84	3.42	30	130	3.4524	6.297	9.749

Piping Takeoff - 4" Force Main HDPE and DI fittings

	K	L
Tee line flow	0.3	
Gate Valve	0.12	
Tee line flow	0.3	
Tee line flow	0.3	
Gate Valve	0.12	
Tee line flow	0.3	
Tee line flow	0.3	
Gate Valve	0.12	
Tee line flow	0.3	
90 degree bend	0.45	
45 degree bend	0.27	
Balance of existing force main		2260
Discharge to manhole		
	2.88	2260

3.874 1.937 3.751969 11.781183 0.081813768

FLUSHING ASSEMBLY
Tee line flow
Gate Valve
Tee line flow

Friction Losses in 4" Force Main

Flow (gpm)	Flow (cfs)	Pipe Size	Area (SF)	Dia (in)	V ft/s	v^2/2g	DI fittings Total K	HDPE Total L	HDPE C	Pipe Friction (ft)	Minor Losses (ft)	Tot Friction (ft)
50	0.111	4	0.0818	3.874	1.36	0.03	2.88	2260	145	4.52	0.083	4.599
100	0.223	4	0.0818	3.874	2.72	0.12	2.88	2260	145	16.30	0.331	16.634
150	0.334	4	0.0818	3.874	4.08	0.26	2.88	2260	145	34.55	0.746	35.291
200	0.445	4	0.0818	3.874	5.44	0.46	2.88	2260	145	58.85	1.326	60.179
250	0.557	4	0.0818	3.874	6.81	0.72	2.88	2260	145	88.97	2.071	91.043
300	0.668	4	0.0818	3.874	8.17	1.04	2.88	2260	145	124.71	2.963	127.690
350	0.780	4	0.0818	3.874	9.53	1.41	2.88	2260	145	165.91	4.060	169.972
400	0.891	4	0.0818	3.874	10.89	1.84	2.88	2260	145	212.46	5.303	217.764

CONFIDENTIAL

Add the total friction losses to obtain a system head curve.

Static Head

Invert in receiving manhole	799.00
Low water level in pump station =	784
Static Head	19

Invert in receiving manhole	799.00
High water in PS =	780
Static Head	15

System Flow (gpm	Friction in 4" Pump Station Piping(DI)	Friction in 4" HDPE Force Main (DI FITTINGS)	Total Friction	TDH at Low operating level	TDH at high operating level
0	0.000	0.000	0.00	19.00	15.00
50	0.172	4.599	4.77	23.77	19.77
100	0.658	16.634	17.29	36.29	32.29
150	1.447	35.291	36.74	55.74	51.74
200	2.531	60.179	62.71	81.71	77.71
250	3.905	91.043	94.95	113.95	109.95
300	5.568	127.690	133.26	152.26	148.26
350	7.517	169.972	177.49	196.49	192.49
400	9.749	217.784	227.51	246.51	242.51

CONFIDENTIAL

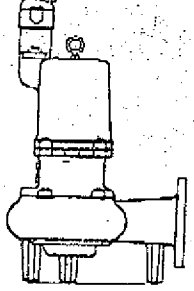

Performance Curve

S4N/S4NX

RPM: **1750** | Discharge: **4"** | Solids: **3"**

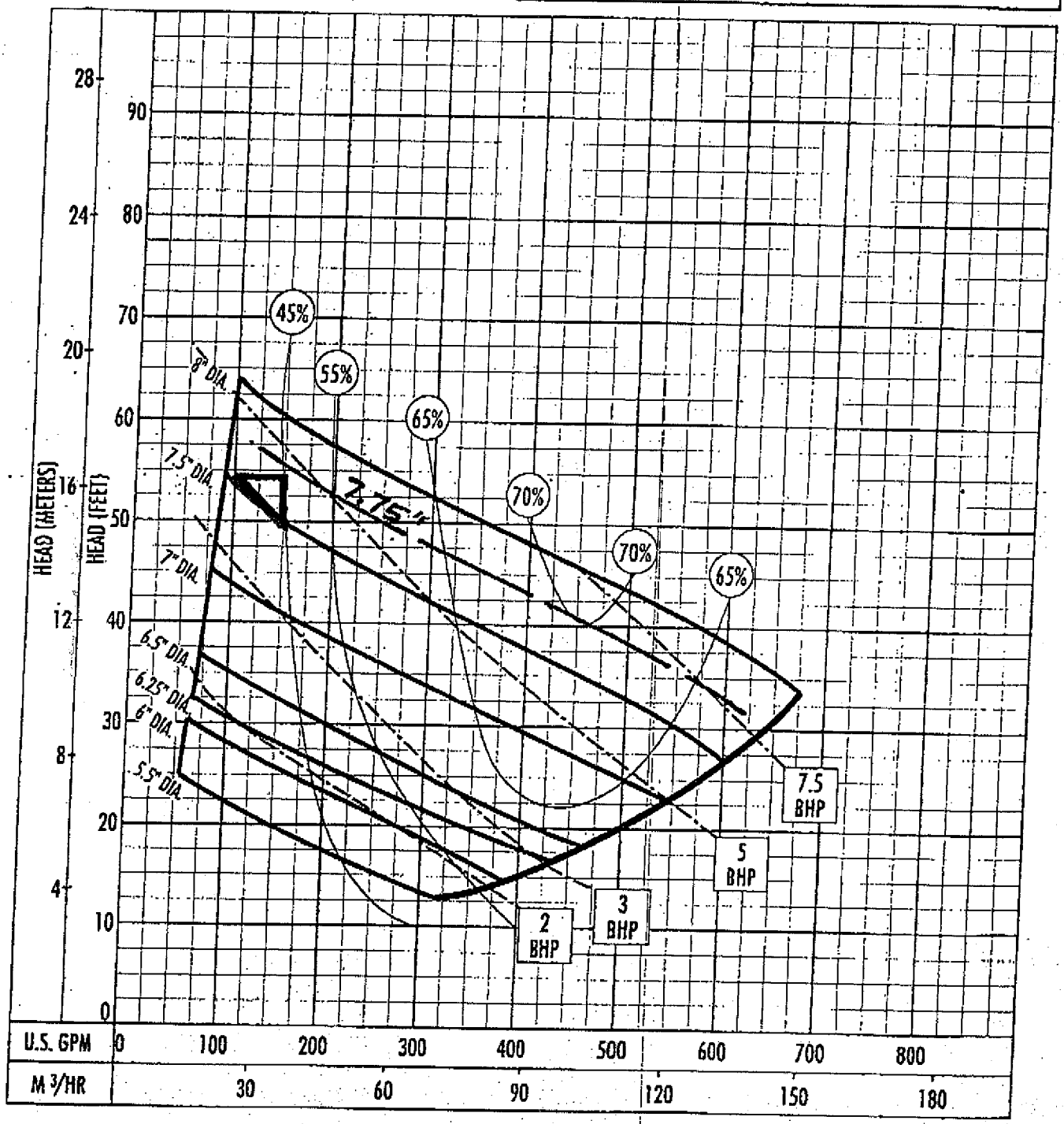

The curves reflect maximum performance characteristics without exceeding full load (Nameplate) horsepower. All pumps have a service factor of 1.2. Operation is recommended in the bounded area with operational point within the curve limit. Performance curves are based on actual tests with clear water at 70° F. and 1280 feet site elevation.

Conditions of Service:

GPM: 150 TDH: 54'

HYDROMATIC®

CONFIDENTIAL

MODEL: S4N & S4NX—Non-Clog Sewage Pump

R.P.M.	1750			
MOTOR TYPE	ENCLOSED, OIL COOLED INDUCTION, VFD SUITABLE			
MOTOR DESIGN NEMA TYPE	B (3ø) L (1ø)			
GENERAL INSULATION CLASS	F			
STATOR WINDING CLASS	F			
MAXIMUM STATOR TEMPERATURE	311°F			
MOTOR PROTECTION	BI-METALLIC, TEMPERATURE SENSITIVE DISC, SIZED TO OPEN AT 120°C AND AUTOMATICALLY RESET @ 30–35°C DIFFERENTIAL, ONE IN SINGLE PHASE, TWO IN THREE PHASE			
ELECTRICAL RATINGS	HEAT SENSOR	24VDC 5AMPS	115VAC 5AMPS	230VAC 5AMPS
	SEAL FAIL	300VAC 5mA		
VOLTAGE TOLERANCE	±10%			

HP	VOLTAGE	PHASE	NEC CODE	SF	FULL LOAD AMPS	SF AMPS	LOCK. RTR. AMPS	RUN KW	START KVA	RUN KVA	MTR. EFF. @ SF	MTR. EFF. 100% FL	MTR. EFF. 75% FL	MTR. EFF. 50% FL	PWR. FACT. @ SF	PWR. FACT. 100% FL	PWR. FACT. 75% FL	PWR. FACT. 50% FL
2	200	1	J	1.2	14.7	17.0	71.5	2.4	14.3	2.9	.63	.63	.60	.54	.84	.81	.75	.66
	230				12.8	14.8	62											
2	200	3	J	1.2	7.8	8.8	46	2.1	15.9	2.7	.74	.73	.70	.63	.79	.76	.70	.59
	230				6.8	7.7	40											
	460				3.4	3.8	20											
	575				2.7	3.1	16											
3	200	1	G	1.2	19.6	22.9	91.0	3.3	18.2	3.9	.67	.67	.65	.57	.88	.85	.80	.71
	230				17.1	20	79											
3	200	3	J	1.2	10.9	12.8	64.5	3.1	22.3	3.8	.73	.72	.70	.64	.83	.82	.80	.72
	230				9.5	11.1	56											
	460				4.8	5.6	28											
	575				3.8	4.5	22.5											
5	200	1	G	1.2	33.9	39.3	144	5.7	28.8	6.8	.66	.66	.65	.60	.87	.84	.77	.64
	230				29.5	34.2	125											
5	200	3	J	1.2	17.6	20.6	108	4.8	37.4	6.1	.79	.79	.77	.72	.80	.78	.73	.62
	230				15.3	17.9	94											
	460				7.6	8.9	47											
	575				6.1	7.2	37.6											
7½	200	3	K	1.2	29	32.9	194	7.2	67	10.1	.78	.78	.76	.71	.76	.72	.66	.56
	230				25.2	28.6	168											
	460				12.6	14.3	84											
	575				10.1	11.4	67.2											

HYDROMATIC®

CONFIDENTIAL

MODEL: S4NX — Explosion Proof Non-Clog Sewage Pumps

Physical Data:

DISCHARGE SIZE	4"
SOLIDS SIZE	3"
IMPELLER TYPE	BALANCED, ENCLOSED, 2 VANE
CABLE LENGTH ✓	~~30'~~ STANDARD 35' 50' OPTIONAL
PAINT	PAINTED AFTER ASSEMBLY. DARK GREEN, WATER REDUCIBLE ENAMEL, ONE COAT, AIR DRIED.

Temperature:

MAXIMUM LIQUID	104°F LABELED/140°F UNLABELED
MAXIMUM STATOR	311°F
OIL FLASH POINT	390°F
HEAT SENSOR Open: Closed:	257°F MAX./239°F MIN. 194°F MAX./119°F MIN.

Technical Data:

POWER CORD TYPE		STW-A WATER RESISTANT 600V, 60°C			
SENSOR CORD TYPE		18-5 STW-A WATER RESISTANT 600V, 60°C, 5.5 AMPS			
MATERIALS OF CONSTRUCTION	MOTOR HOUSING	CAST IRON	ASTM	A-48	CLASS 30
	CASING	CAST IRON	ASTM	A-48	CLASS 30
	IMPELLER	DUCTILE IRON	ASTM	A-536	
	CASING WEAR RING	BRONZE	ASTM	B-584-932	ALLOY 315
	MOTOR SHAFT	416 STAINLESS STEEL			
	HARDWARE	300 SERIES STAINLESS STEEL			
	"O" RINGS	BUNA N			
MECHANICAL SEALS ✓ Standard: Optional:		UPPER AND LOWER CARBON/CERAMIC/BUNA-N, TYPE 21 LOWER TUNGSTEN CARBIDE/TUNGSTEN CARBIDE/BUNA-N, TYPE 21			
UPPER BEARING		(RADIAL) SINGLE ROW — BALL			
LOWER BEARING		(THRUST) SINGLE ROW — BALL			

HYDROMATIC®

CONFIDENTIAL

S4N/S4NX

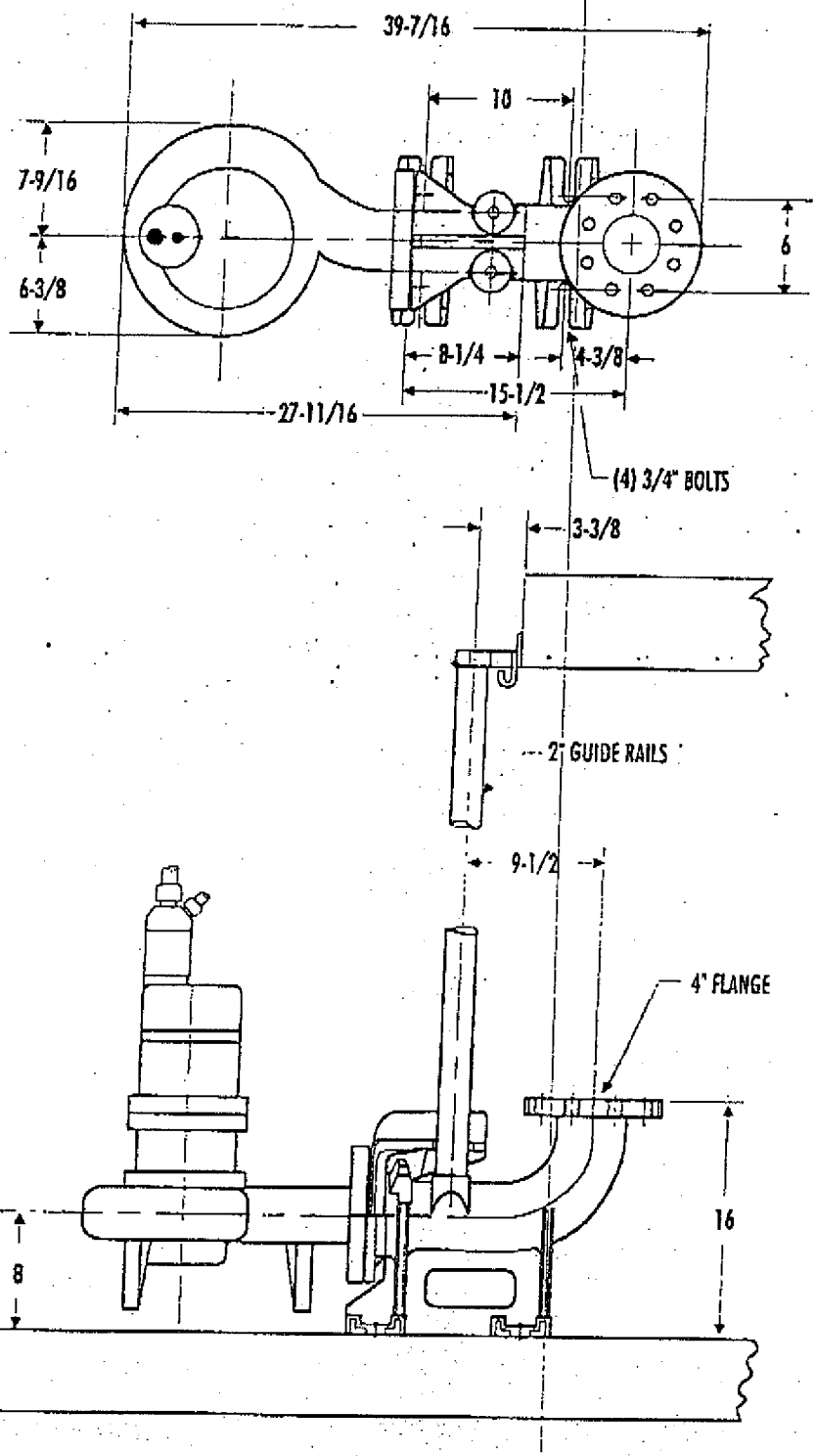

ALL DIMENSIONS IN INCHES

NOTE: CASTING DIMENSIONS MAY VARY ± 1/8"

HYDROMATIC®

TOTAL P.005

CONFIDENTIAL

Pennsylvania Inserts ATH
3030S Aluminum HS-20 Hatch

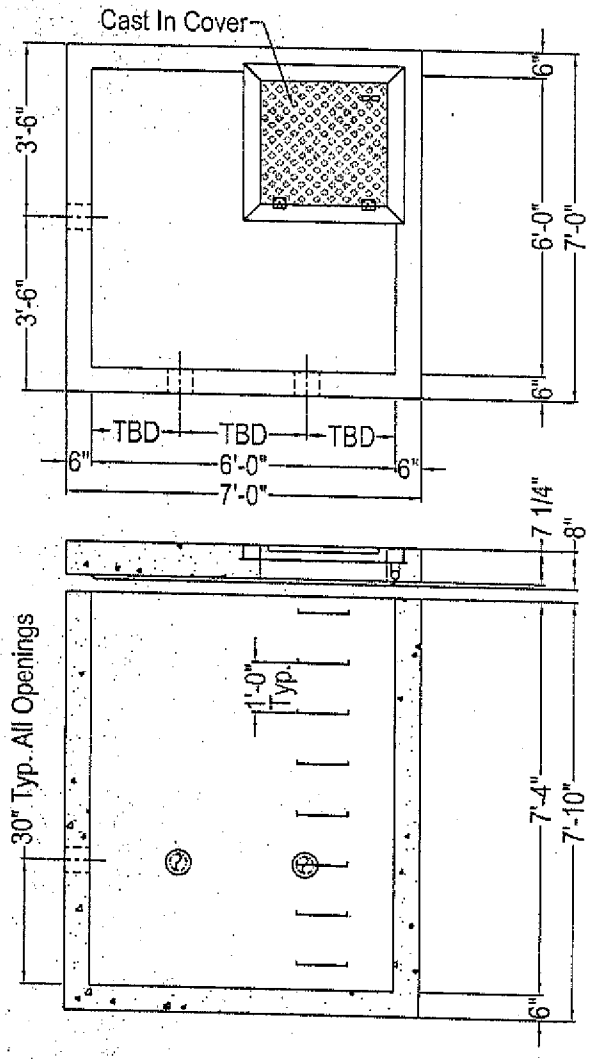

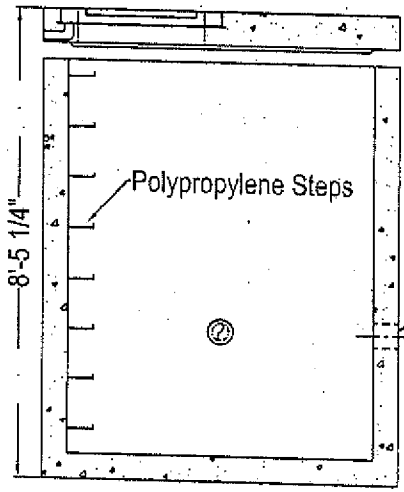

VALVE PIT

NOTES:

CONCRETE: 5000 psi @ 28 days
REF: Cover - #6 rebar @ 6" o.c. in one direction
#5 rebar @ 10" o.c. in one direction
(2" of concrete cover)
Walls - #4 rebar @ 8" o.c. each way
(2" of concrete cover from outside face)
Base - #4 rebar @ 6" o.c. each way
(1-1/2" concrete cover)
Additional #5 rebar diamonds around all openings including hatch
#5 bent "L's" from base to wall 8" o.c.
OPENINGS: coreout openings as shown on detail drawing
HATCH: Penn Inserts ATH 3030S HS-20 Alum. Hatch
STEPS: MA Industry-polypropylene

WEIGHT:
Base & Walls: 18,700#
Cover: 5,000#

Contractor to confirm all dimensions before production begins.

TBD = to be determined

Zeiser
Wilbert
VAULT, INC.
CONCRETE PRODUCTS

750 Howard Street Elmira, NY 14904
Fax: (607) 737-0291
Phone: (607) 733-0568
1-800-472-4335

Title: Valve Pit

Scale: Not To Scale

Drawn By: JPS

Drawing No.: 08060800

Date: 8-6-08

CONFIDENTIAL

Fax to:	Customer		Approved/Notes
Fax#	Project		
From	Job#	Ship Date	
Date	PA Insert Quote/Order#	Page _____of _____	

Pennsylvania Insert Corp
PO Box 199
Spring City PA 19475
tel: 610-948-9688
fax: 610-948-9750

email: sales@pennsylvaniainsert.com
web: www.pennsylvaniainsert.com

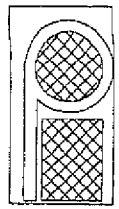

Specifications: "Just Set" Aluminum H20-Rated, Watertight Door

Access door shall be a heavy duty watertight door as manufactured by Pennsylvania Insert Corp., SpringCity, PA. Door lid shall be fabricated with 1/4" aluminum diamond plate designed to support *AASHTO H20 loading without impact with a maximum deflection of 1/150th of span. Frame shall be an extruded aluminum channel-type frame with a 3/16" neoprene gasket, continuous anchor flanges and a 1-1/2" plastic swiveling drain coupling attached to the underside. Door shall open 90 degrees and automatically lock in that position with an aluminum hold open arm with a red vinyl grip. Door lid shall be equipped with a recessed lift handle. Hinges shall be all stainless steel and attached with tamperproof fasteners to lid and zinc die cast inserts to frame. All hardware shall be stainless steel. Door shall have a mill finish with an electrolytic barrier applied to the exterior of the frame to prevent hydrolysis with concrete. Door shall be equipped with a stainless steel spring assist which shall provide a smooth and controlled operation when opening and closing door. Operation shall not be affected by temperature. Door shall be equipped with a stainless steel slam lock with cover plug and removable handle. Manufacturer shall guarantee material and workmanship for a period of five years.

*suitable for incidental traffic only

CONFIDENTIAL

Fax to:	Customer		Approved/Notes
Fax#	Project		
From	Job#	Ship Date	
Date	PA Insert Quote/Order#	Page _____ of _____	

Pennsylvania Insert Corp
PO Box 199
Spring City PA 19475
tel: 610-948-9688
fax: 610-948-9750
email: sales@pennsylvaniainsert.com
web: www.pennsylvaniainsert.com

"Just Set" ALUMINUM DOOR, HEAVY DUTY, SINGLE LEAF - TROUGH FRAME

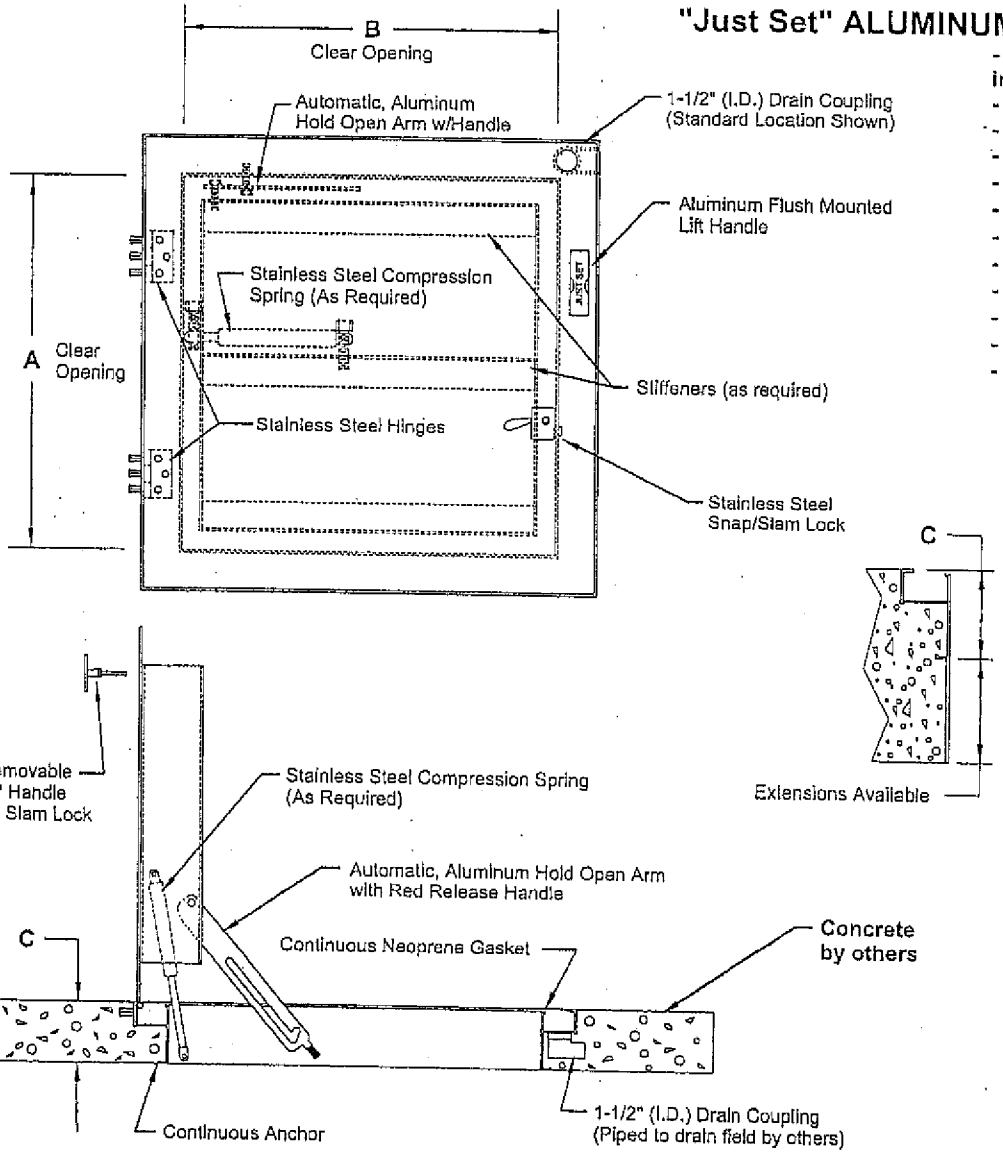

- 1/4" Diamond Plate Lid Reinforced for HS-20 Wheel Loading **without Impact -for incidental traffic only**
- 6" Drain Trough Frame with Gasket
- Protective Barrier where Concrete meets Aluminum
- Continuous Anchor to Lock Frame into Concrete
- Stainless Steel Compression Spring as required
- Stainless Steel (Butt Style) Hinges & Hinge Pin Anchored with Steel Inserts.
- Stainless Steel Hardware
- Type 316 Stainless Steel Snap Lock
- 1-1/2" (I.D.) Drain Coupling
- Automatic Hold Open Arm with Red Release Handle
- Aluminum Flush Mounted Lift Handle
- 5 Year Warranty

STANDARD DIMENSIONS				
QTY	A	B	C	STOCK#
	24"	24"	6.00"	ATH2424S
	30"	30"	6.00"	*ATH3030S
	36"	24"	6.00"	*ATH3624S
	36"	36"	6.00"	*ATH3636S
	42"	42"	6.50"	*ATH4242S
	48"	36"	6.50"	*ATH4836S
	48"	48"	6.50"	*ATH4848S

An asterisk (*) next to stock number = stainless steel compression spring is standard.

OPTIONS

- Frame Extension for ____" Slab
- Insulation
- Safety Chains & Posts
- Stainless Steel Pneumatic Assist
- Anodizing

LOCK OPTIONS

- Staple For Padlock
- Recessed Hasp
- Keyed Deadbolt Lock
- Pentahead Lock
- Heavy Duty Security Lock

Installation shall be in accordance with manufacturer's instuctions

NO SCALE

06/08/04

CONFIDENTIAL

Link-Seal® Modular Seal Model Properties

with EPDM Seal Elements

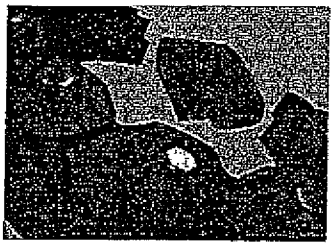

EPDM (Black)
EPDM (Blue) Low Durometer

Model "C" or "L" Link-Seal Modular Seal

Suitable for use in water, direct ground burial and atmospheric conditions. Provides electrical isolation where cathodic protection is required.
Type: Standard
Seal Element: EPDM (Black) or EPDM (Blue)
Pressure Plates: Reinforced Nylon Polymer
Bolts & Nuts: Steel with 2-part Zinc Dichromate & proprietary corrosion inhibiting coating.
Temp. Range: -40 to +250°F (-40 to +121°C)*

Model "S-316" Link-Seal Modular Seal

For chemical processing & waste water treatment. EPDM rubber is resistant to most inorganic acids and alkalis, some organic chemicals (acetone, alcohol, ketones).
Type: Stainless
Seal Element: EPDM (Black) or EPDM (Blue)
Pressure Plates: Reinforced Nylon Polymer
Bolts & Nuts: 316 Stainless Steel
Temp. Range: -40 to +250°F (-40 to +121°C)*

* = Sustained operation near temperature limits may affect life expectancy.

with Nitrile Seal Elements

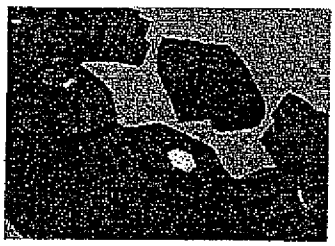

Nitrile (Green)

Model "O" Link-Seal Modular Seal

Nitrile rubber is resistant to oils, fuel and many solvents (gasoline, motor oil, kerosene, methane, jet fuel, hydraulic fluid, water, etc.).
Type: Oil Resistant
Seal Element: Nitrile (Green) Note: Not U.V resistant.
Pressure Plates: Reinforced Nylon Polymer
Bolts & Nuts: Steel with 2-part Zinc Dichromate & proprietary corrosion inhibiting coating.
Temp. Range: -40 to +210°F (-40 to +99°C)*

Model "OS-316" Link-Seal Modular Seal

Combination of oil resistant rubber and stainless steel hardware.
Type: Oil Resistant
Seal Element: Nitrile (Green) Note: Not U.V resistant.
Pressure Plates: Reinforced Nylon Polymer
Bolts & Nuts: 316 Stainless Steel
Temp. Range: -40 to +210 °F (-40 to +99°C)*

* = Sustained operation near temperature limits may affect life expectancy.

with Silicone Seal Elements

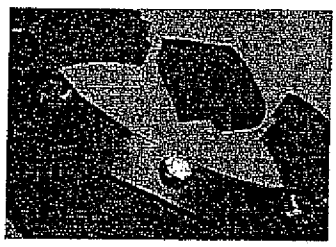

Silicone (Grey)

Model "T" Link-Seal Modular Seal

Silicone rubber is ideal for temperature extremes. The "T" model is the one hour Factory Mutual approved.
Type: High/Low Temperature
Seal Element: Silicone (Grey)
Pressure Plates: Steel Zinc Dichromate
Bolts: Steel with 2-part Zinc Dichromate & proprietary corrosion inhibiting coating.
Temp. Range: -67 to +400°F (-55 to +204°C)*

Model "FD/FS" Link-Seal Modular Seal

Double seal for added protection.
Type: Fire Seals
Seal Element: Silicone (Grey)
Pressure Plates: Steel zinc dichromate
Bolts: Steel with 2-part Zinc Dichromate proprietary corrosion inhibiting coating.
Temp. Range: -67 to +400°F (-55 to +204°C)*

NOTE: Sustains a constant temp. of 325°F. (163° C.)
* = Sustained operation near temperature limits may affect life expectancy.

Material Properties of Link-Seal Modular Seal Elements

PROPERTY	ASTM METHOD	EPDM (EPDM L)	NITRILE	SILICONE
Hardness (shore A)	D-2240	50 ±5 (40 ±5)	50 ±5	50 ±5
Tensile	D-412	1450 psi	1300 psi	860 psi
Elongation	D-412	400%	300%	250%
Compression Set	S-395	15% 22 hrs. @ 158°F (70°C)	45% 22 hrs. @ 212°F (100°C)	40% 22 hrs. @ 350°F (177°C)
Specific Gravity	D-297	1.10	1.42	1.40

Material Properties of Composite Pressure Plates

PROPERTY	ASTM METHOD	VALUE
Izod Impact - Notched	D-256	2.05 ft-lb/in
Tensile Strength @ Yield	D-638	20,000 psi
Tensile Strength - Break	D-638	20,250 psi
Flexural Strength @ Yield	D-790	30,750 psi
Flexural Modulus	D-790	1,124,000 psi
Elongation, Break	D-638	11.07%
Specific Gravity	D-792	1.38
Moisture Content	–	0.18%

Bolt & Nut Specifications

Standard: Carbon Steel
Carbon steel, zinc dichromated per ASTM B633, with an additional corrosion inhibiting proprietary organic coating. (passes 1470 hour salt spray test)
Tensile Strength = 60,000 psi, minimum.

Option: Stainless Steel
ANSI Type = 316, Per ASTM F593-95
Tensile Strength = 85,000 psi, average.

PSI-Thunderline/Link-Seal®
6525 Goforth Street, Houston TX 77021 U.S.A.
Tel: 713-747-6948, Fax: 713-747-6029, Toll Free: 800-423-2410
www.linkseal.com, e-mail: info@psipsi.com

Submittal LS-10/05
©2005, Pipeline Seal & Insulator, Inc

CONFIDENTIAL

Typical Specification

1.0 General

Under this section there shall be furnished and installed a complete Link-Seal® modular seal assembly, manufactured by PSI-Thunderline/Link-Seal® located at 6525 Goforth Street, Houston, TX 77021, as shown on drawings and specifications. For clarification, complete assembly is defined as a combined:

A. Wall opening (i.e. steel sleeve, Thermoplastic (HDPE) sleeve, cored hole or formed hole). The wall opening size and/or type shall be selected according to recommendations found in the most recent Link-Seal® modular seal catalog.

B. Sufficient quantity and type of Link-Seal® modular seals required to effectively provide a hydrostatic and/or fire-rated seal.

C. Each individual link shall be conspicuously and permanently identified with the name of the manufacturer and model number. Manufacturers other than the above-named company wishing to quote equipment in this section shall submit detail drawings of their proposed equipment and suitable evidence of a minimum of 25 years of experience and results to the engineer to obtain written approval to quote at least ten (10) days prior to bid opening.

2.0 Link-Seal® Modular Seal Rubber Links

Shall be modular, mechanical type, consisting of inter-locking synthetic rubber links shaped to continuously fill the annular space between the pipe and the wall opening. The elastomeric element shall be sized and selected per manufacturer's recommendations and have the following properties as designated by ASTM. Coloration shall be throughout elastomer for positive field inspection. Each link shall have a permanent identification of the size and manufacturer's name molded into it.

A. For Standard Service Applications = Model C -40 to +250°F (-40 to +121°C) EPDM = ATSM D2000 M3 BA510 Color = Black

B. For Thin Walled Pipe Applications = Model L -40 to +250°F (-40 to +121°C) EPDM = ATSM D2000 M3 BA510 Color = Blue

C. For Hydrocarbon Service Applications = Model O -40 to +210°F (-40 to +99°C) Nitrile = ASTM D2000 M1BF510 Color = Green

D. For High Temperature or Fire Seal Applications = Model T -67 to +400°F (-55 to +204°C) Silicone = ASTM D2000 M1GE505 Color = Gray

Reference shall always be made to the latest published Link-Seal® modular seal selection guide for the service intended.

2.1 Link-Seal® Modular Seal Pressure Plates

A. Link-Seal® modular seal pressure plates shall be molded of glass reinforced Nylon Polymer with the following properties:
Izod Impact - Notched = 2.05ft-lb/in. per ASTM D-256
Flexural Strength @ Yield = 30,750 psi per ASTM D-790
Flexural Modulus = 1,124,000 psi per ASTM D-790
Elongation Break = 11.07% per ASTM D-638
Specific Gravity = 1.38 per ASTM D-792

B. Models LS200-275-300-315 shall incorporate the most current Link-Seal® Modular Seal design modifications and shall include an integrally molded compression assist boss on the top (bolt entry side) of the pressure plate, which permits increased compressive loading of the rubber sealing element. Models 315-325-340-360-400-410-425-475-500-525-575-600 shall incorporate an integral recess known as a "Hex Nut Interlock" designed to accommodate commercially available fasteners to insure proper thread engagement for the class and service of metal hardware. All pressure plates shall have a permanent identification of the manufacturer's name molded into it.

C. For fire and Hi-Temp service, pressure plates shall be steel with 2-part Zinc Dichromate Coating.

2.2 Link-Seal® Modular Seal Hardware

All fasteners shall be sized according to latest Link-Seal® modular seal technical data. Bolts, flange hex nuts shall be either:

A. Mild Steel with a 60,000 psi minimum tensile strength and 2-part Zinc Dichromate coating per ASTM B-633 and Organic Coating, tested in accordance with ASTM B-117 to pass a 1,470 hour salt spray test.

B. 316 Stainless Steel per ASTM F593-95, with a 85,000 psi average tensile strength.

3.0 Wall Opening

A. Century-Line® Sleeves - for openings to 24.81" diameter.
Where pipes must pass through walls and floors of new structures, unless otherwise shown or specified, install molded non-metallic high density polyethylene Model CS Century-Line® sleeves as manufactured by PSI-Thunderline/Link-Seal®. Model CS sleeves shall have integrally formed hollow water stop sized having a minimum of four inches larger than the outside diameter of the sleeve itself and allowing 1/2" movement between wall forms to resist pour forces. Each sleeve assembly shall have end caps manufactured of the same material as the sleeve itself and installed at each end of the sleeve so as to prevent deformation during the initial concrete pour, and to facilitate attaching the sleeve to the wall forms. End caps shall remain in place to protect the opening from residual debris and rodent entry prior to pipe insertion.

B. Cell-Cast® Disks - for openings from 29.25" to 64.74" diameter.
The contractor shall install Cell-Cast® disks, providing a round hole in conformance with Link-Seal® modular seal sizing data. Cell-Cast® disk shall consist of 3" and/or 4" lightweight interlocking polyethylene cells stacked to form the thickness of the poured concrete wall. Molded into each cell shall be a cavity to accept a 2" x 4" nailer.

4.0 Quality Assurance

Link-Seal® Modular Seal components and systems shall be domestically manufactured at a plant with a current ISO-9001:2000 registration. Copy of ISO-9001:2000 registrations shall be a submittal item.

NOTE: Link-Seal Modular Seals are specifically designed as hydrostatic and/or fire rated seals and are not considered to be pipe supports. When appropriate, Link-Seal Modular Seals should be used with proper pipe supports on both ends.

CONFIDENTIAL

Technical Data Submittal Sheet

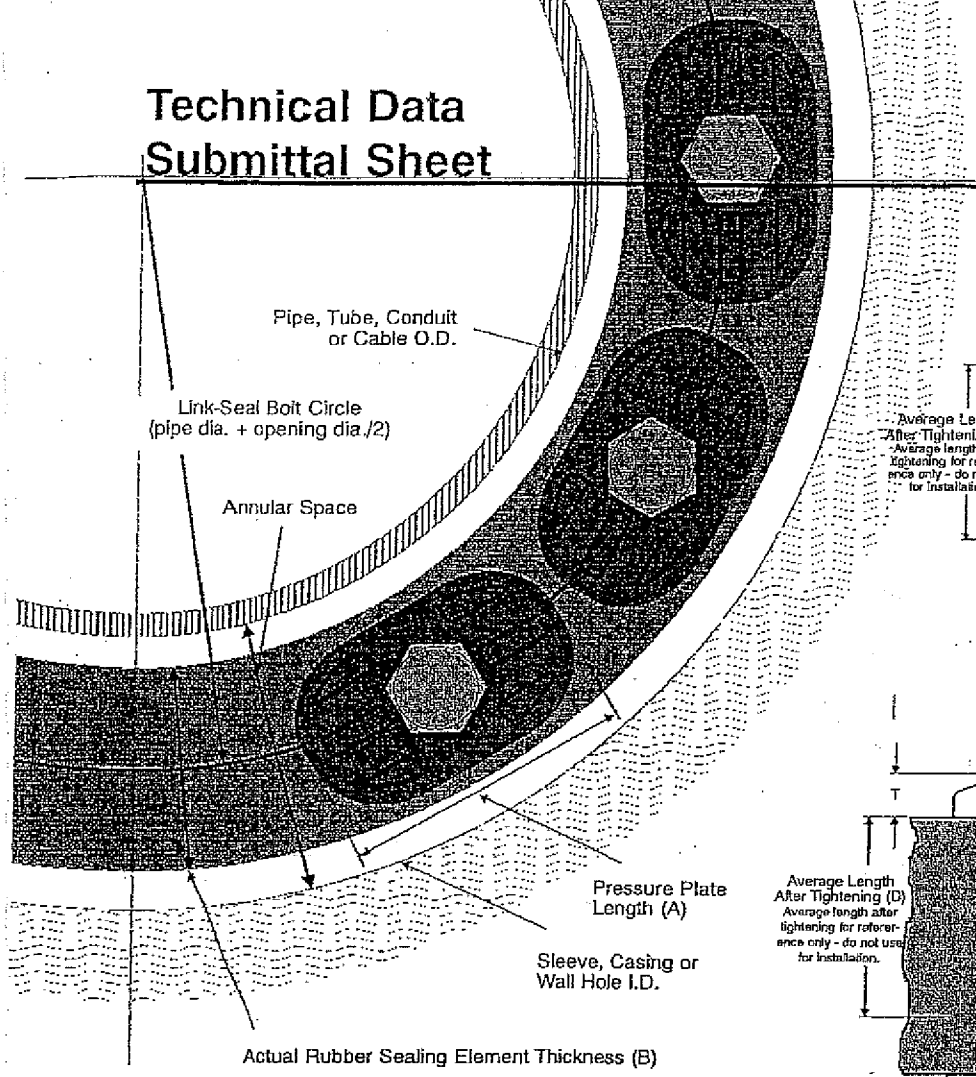

For LS-200 through LS-315

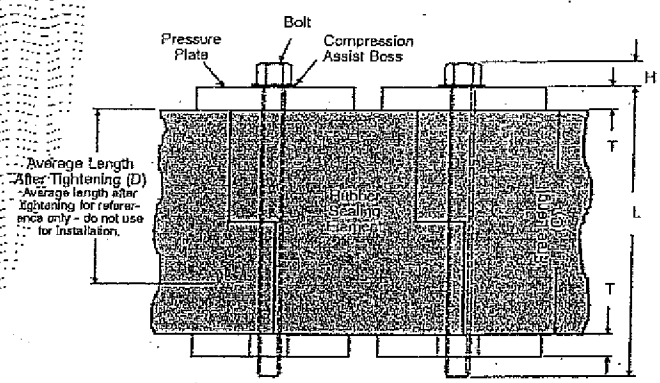

For LS-325 through LS-600

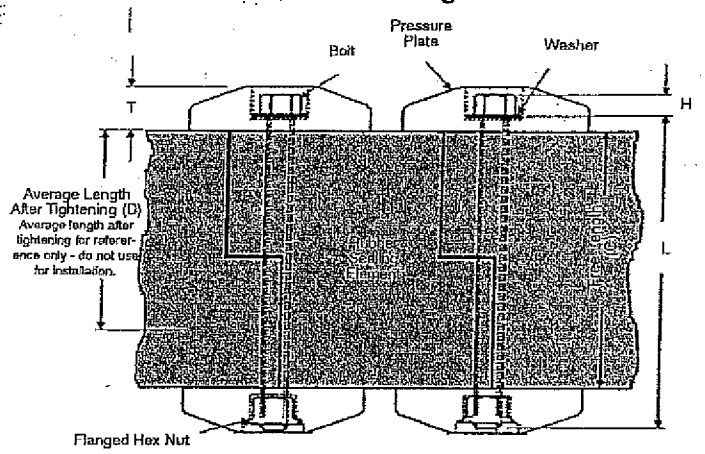

Dimensional Data for Models C, L, O, S-316 and OS-316 (Dimensions in inches except as noted)

LINK-SEAL MODEL NO.	RUBBER SEALING ELEMENT			PRESSURE PLATE		BOLT				WEIGHT FOR 10 LINK SECTION (LBS)	MIN. REQUIRED SEATING WIDTH
	ACTUAL THICKNESS (B)	FREE LENGTH (C)	AVG. LENGTH AFTER TIGHTENING (D)	(A)	(T)	HEX ACROSS FLATS	(H)	THREAD SIZE	(L)		
LS-200-C	0.48	1.75	1.38	1.06	0.31	M5 (slotted hex)	0.18	M5	2.50	0.75	2.25
LS-275-C	0.61	1.75	1.38	0.90	0.31	M5 (slotted hex)	0.18	M5	2.50	0.85	2.25
LS-300-C	0.69	2.37	1.87	1.50	0.44	0.50	0.22	5/16-18	3.50	2.10	3.00
LS-315-C	0.81	2.37	1.87	1.44	0.44	0.50	0.22	5/16-18	3.50	3.00	3.00
LS-325-C	0.88	2.63	2.00	3.13	1.00	0.50	0.22	5/16-18	4.50	5.50	4.00
LS-340-C	1.00	2.70	2.25	1.52	0.67	0.50	0.22	5/16-18	4.50	3.40	4.00
LS-360-C	1.24	2.70	2.25	2.05	0.77	0.50	0.22	5/16-18	4.50	5.00	4.00
LS-400-C	1.38	3.50	2.75	3.50	1.06	0.56	0.25	3/8-16	5.00	12.00	5.00
LS-410-C	1.43	3.37	2.87	2.52	0.88	0.56	0.25	3/8-16	5.00	8.20	5.00
LS-425-C	1.06	3.00	2.25	3.50	1.19	0.56	0.25	3/8-16	5.00	10.00	5.00
LS-475-C	1.56	3.38	2.63	2.63	0.88	0.56	0.25	3/8-16	5.00	10.00	5.00
LS-500-C	2.25	3.75	2.75	3.63	1.06	0.75	0.34	1/2-13	5.50	22.50	5.00
LS-525-C	2.06	3.75	2.87	3.63	1.06	0.75	0.34	1/2-13	5.50	21.00	5.00
LS-575-C	1.81	3.75	3.00	3.00	1.00	0.75	0.34	1/2-13	5.50	15.50	5.00
LS-600-C	3.09	4.00	3.00	6.00	1.90	29.6mm	12.8mm	M20X2.5	180mm	60.60	6.00

CONFIDENTIAL

PSI-Thunderline/Link-Seal®
6525 Goforth Street, Houston TX 77021 U.S.A.
Tel: 713-747-6948, Fax: 713-747-6029
Toll Free: 800-423-2410, www.linkseal.com

LOCAL LINK-SEAL® MODULAR SEAL REPRESENTATIVE

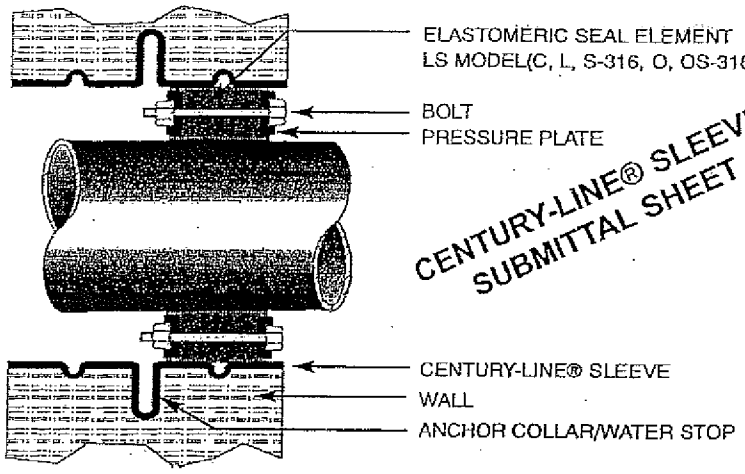

CENTURY-LINE® SLEEVE SUBMITTAL SHEET

JOB _____

CUSTOMER _____

P.O. # _____

DATE _____

SUBMITTED BY _____ DATE _____

APPROVED BY _____ DATE _____

LINK-SEAL® MODEL NO. EXAMPLE

LS - 400 - C - 10

- LINK-SEAL®
- SIZE
- MODEL
- NO. OF LINKS

CENTURY-LINE® MODEL NO. EXAMPLE

CS - 10 - 16 - 1

- CS SLEEVE MODEL NO.
- SLEEVE LENGTH (INCHES)
- NO. OF UNITS

QTY.	PIPE SIZE & TYPE	PIPE O.D.	LINK-SEAL® MODEL NO.	CENTURY-LINE® SLEEVE MODEL	LOCATION OR TAG NO.

VISIT WWW.LINKSEAL.COM FOR LITERATURE, CAD DRAWINGS & INSTALLATION TECHNIQUES.

Submittal CS 10/05
©2005, Pipeline Seal & Insulator, Inc.

CONFIDENTIAL

Century-Line® Engineered Sleeves

Century-Line® Sleeves

are used to create circular holes in concrete poured barriers of all types including; walls, floors and ceilings. Molded from non-conductive, high impact resistant HDPE, Century-Line® sleeves are lightweight and easily installed by one construction worker without use of cranes or hoists. They are available in 16 diameters ranging from 2" to 25" (51mm - 635mm) and shipped, from stock, in any desired length.

Features

16 sizes - 2" to 25" in diameter

In the event of a field or engineering change, sleeves may be cut shorter at the job site using ordinary hand tools. Standard sleeves are 16" (40.6mm) in length. Longer length models may also be quickly fabricated as a custom ordered item.

1/8 the weight of steel

Century-Line® sleeves are light enough for one worker to install without a crane, hoist or helper which reduces installation time and costs. Century-Line® sleeves are easy to stock and far less expensive to ship, when compared to steel sleeves.

Resists water migration.

The 2" (50.8mm) water stop collar not only anchors the sleeve in position but creates a path against the migration of water around the outside of the sleeve.

Adjusts to wall thickness.

Century-Line sleeves' unique hollow water stop collar acts like an expansion joint, adjusting (up to 1/2" - 12.7mm) to the thickness of the wall. This compressive force reacts against the forms like a spring, creating pressure and maintains proper sleeve location within the form.

Nailer end caps position sleeve precisely in form.

Specially designed end caps provide an ideal method for attaching Century-Line® sleeves to the concrete forms. The end caps assure that the sleeve holds its circular configuration during the pour. In addition to keeping out wet concrete, they also prevent dirt from entering the sleeve during backfill operations or the interim construction period.

Tough high density polyethylene (HDPE) construction.

High impact resistant HDPE also provides excellent resistance to acids, alkalis and other organic solvents. Ideal for cathodic protection systems, these non-conductive sleeves will neither rust, corrode or degrade. Low-temperature properties are such that they may be installed under any weather conditions suitable for pouring concrete. High temperature application limit is 150° F. (66° C.). The sleeve is molded with a texture on the outside surface to assure a better bond than most plastic to concrete interfaces.

How To Order

Please see Engineering Manual page 7 for ordering information on Link-Seal® modular seals and Century-Line® sleeves.

Weights and Dimensional Data
Model CS (16" length)

MODEL	I.D. (In.)	I.D. (mm)	lbs.	Kg.
CS-2	2.09	53.1	0.70	0.32
CS-3	2.94	74.7	1.30	0.59
CS-3-1/2	3.38	85.9	1.50	0.68
CS-4	4.03	102.4	2.00	0.90
CS-5	5.14	130.6	2.80	1.27
CS-6	6.14	156.0	3.60	1.63
CS-8	8.21	208.5	4.80	2.18
CS-10	10.19	258.8	6.40	2.90
CS-12	12.26	311.4	7.20	3.27
CS-14	14.14	359.2	11.20	5.08
CS-16	16.18	411.0	12.00	5.44
CS-18	17.45	443.2	15.50	7.03
CS-20	19.12	485.6	17.50	7.94
CS-22	20.32	516.1	21.00	9.53
CS-24	22.76	578.1	22.00	9.98
CS-25	24.81	630.2	23.00	10.43

Note: Swimming pool and floor applications, please specify exact lenghts when ordering. Typically, a form is not installed on the top of a pool or floor, the CS sleeve water stop will not compress in these applications.

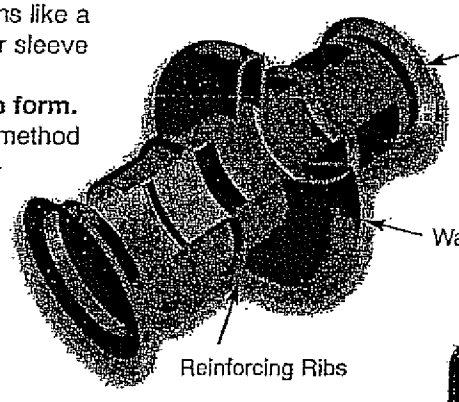

Adjusts To Wall Tickness

Century-Line sleeves unique hollow water stop collar works like an expansion joint, adjusting (up to 1/2") to the thickness of wall. This design creates a dynamic force against the form.

Submittal CS 10/05
©2005, Pipeline Seal & Insulator, Inc.

CONFIDENTIAL

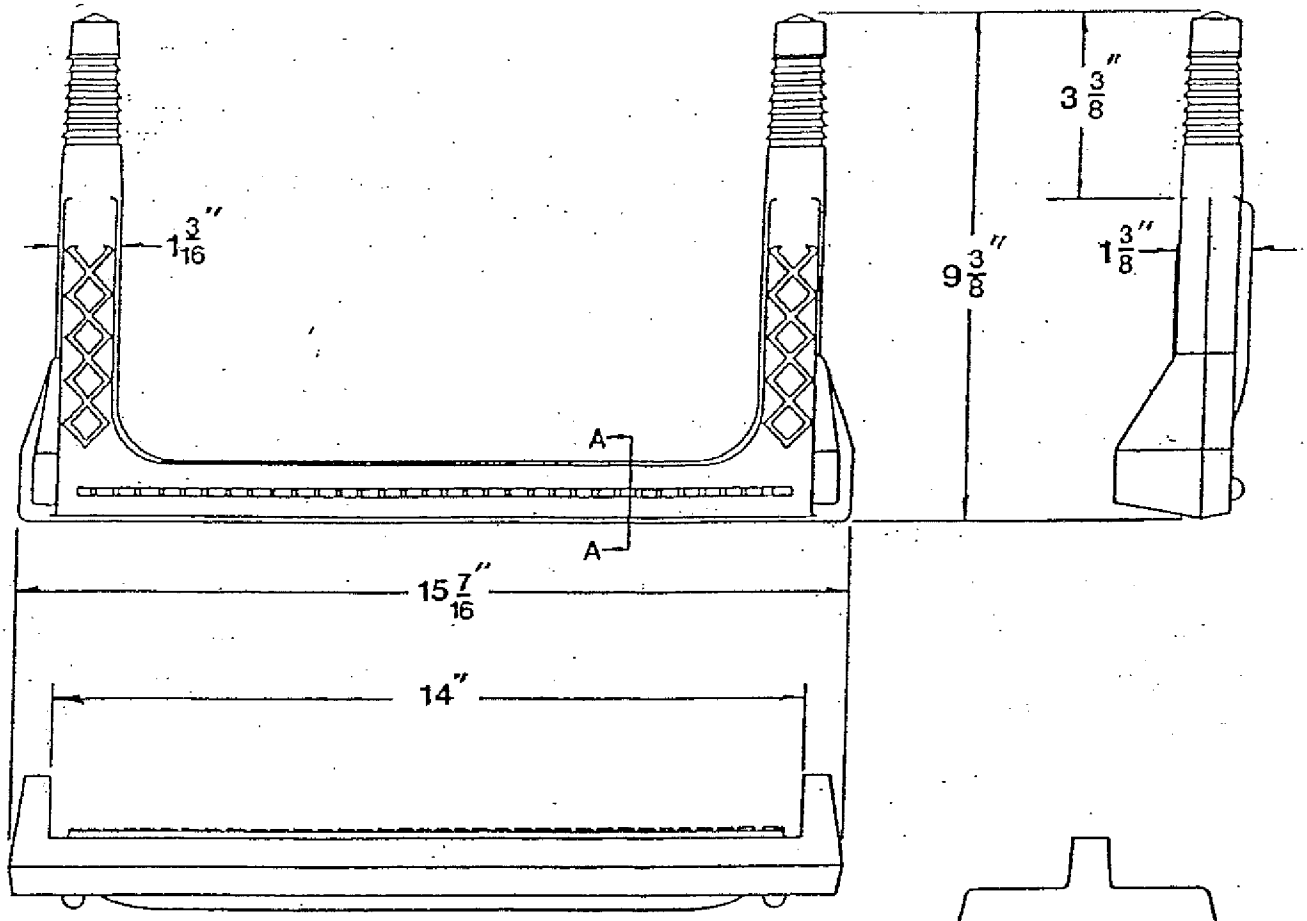

Copolymer Polypropylene Plastic

1/2" GRADE 60 STEEL REINFORCEMENT

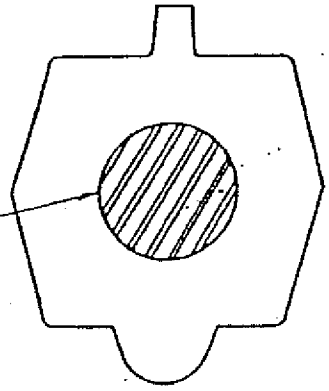

SECTION-A

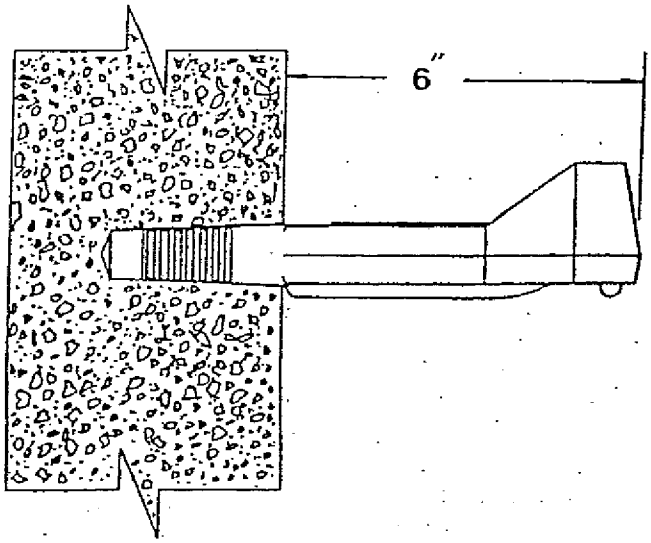

PS2-PF

Manhole Step

M.A. Industries Inc.
Kelley & Dividend Dr.
Peachtree City Ga.

7/31/91

CONFIDENTIAL

M.A. STEP

The manhole step for engineers, precasters, and maintenance personnel. Injection molded of tough copolymer polypropylene that encapsulates a 1/2" grade 60 steel reinforcing rod. This combination plus our manufacturing technology and quality control provides a better manhole step.

LONG LIFE IN CORROSIVE ENVIRONMENTS

Has polypropylene's superior resistance to all types of corrosive environments found in sewers. Tests show polypropylene resists even 50% hydrogen sulfide or sulfuric acid solutions up to 120° F.

Accelerated aging tests on polypropylene indicate a life expectancy as long as that of the manhole you install it in.

CONSISTENTLY TIGHT INSTALLATIONS

The M.A. "press fit" step is simply hand driven by hammer into preformed holes in the cured concrete. No grout or epoxy is used. Driving the step into the hole forms a positive friction lock, which is reinforced by the locking rings (clearly shown in the photo) securely wedged against the concrete.

The other M.A. steps have surface projections that assure retention whether the steps are cast in place or vibrated into green concrete.

IMPACT AND PULLOUT STRENGTH

Impact testing of up to 300 foot pounds, with only minor deflection and no cracking or breaking, proves that the M.A. step will withstand even abusive usage.

And it will resist pullout forces of over 1500 pounds—whether cast in place, vibrated into green concrete, or press-fit installed into preformed holes.

Preformed Hole

Installing Step

Installed Step

Perfect Alignment

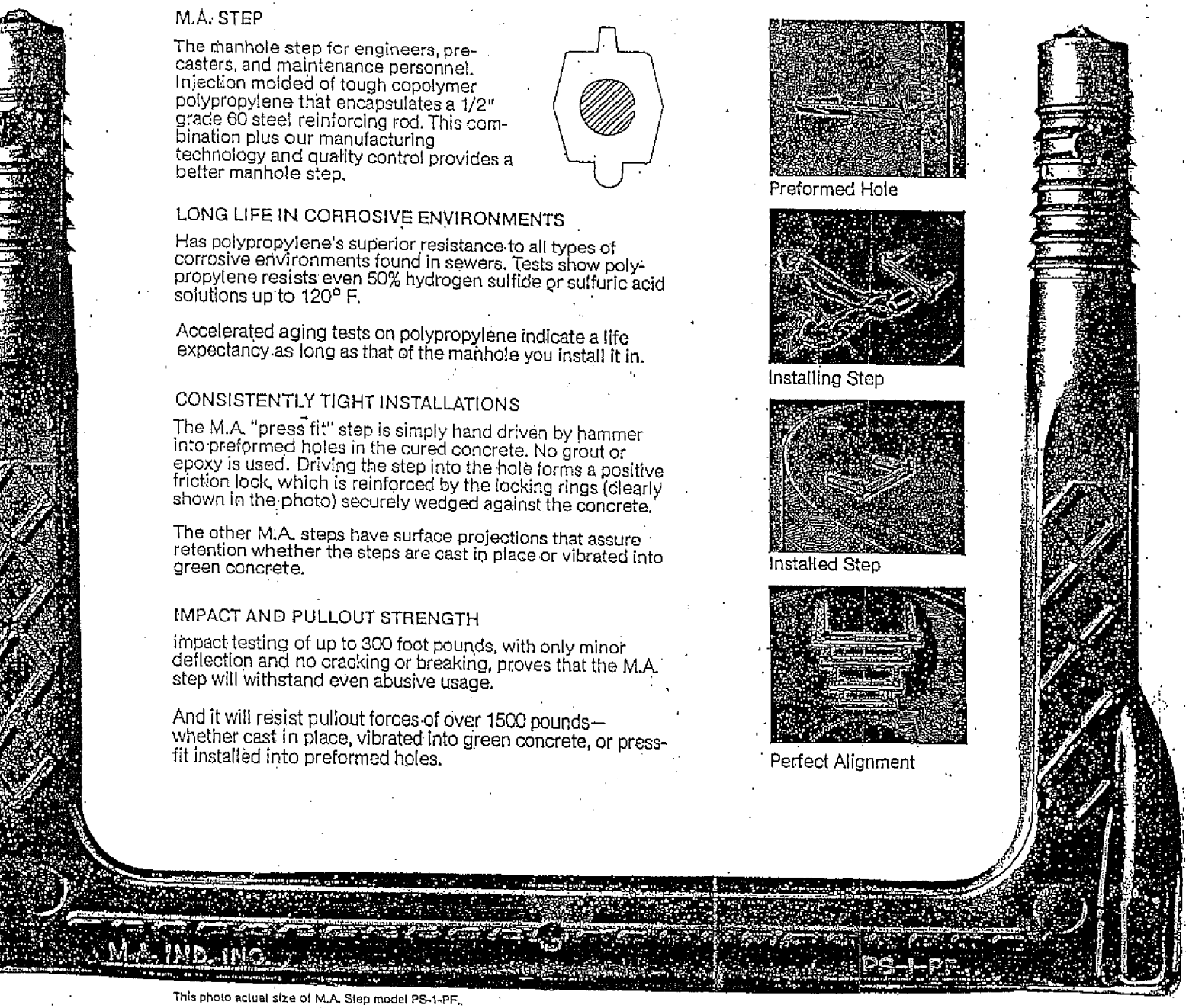

This photo actual size of M.A. Step model PS-1-PF.

SAFETY

Serrated tread and tall end lugs prevent the feet from slipping forward, backward, or sidewards off the M.A. step.

The polypropylene will not spark against a steel heel tap or dangling tool—so no explosive concentration of gas will be ignited.

OSHA

OSHA Instruction STD 1-1.9, issued December 29, 1978, revised the agency's original directive for FIXED LADDERS, 29 CFR 1910.27, to specifically exclude manhole steps. STD 1-1.9 says: "individual rungs or steps used for access or egress, embedded in the walls of risers or the conical top sections of manholes, shall be safe, well constructed, and installed in accordance with good engineering practices."

M.A. Industries will furnish, on request, the above OSHA information plus any more recent update.

ASTM

The M.A. manhole step is in conformance with ASTM C-478. It is available in various sizes to fit the dimensional requirements of different locales.

CONFIDENTIAL

Technical Data
Flexible Butyl Resin Sealant
CONCRETE SEALANTS
CS-102 & CS-202

SPECIFICATIONS

- ConSeal CS-102 and CS-202 meet or exceed the requirements of Federal Specification SS-S-210 (210-A), AASHTO M-198B, and ASTM C-990-91.

PHYSICAL PROPERTIES

	Spec	Required*	CS-102	CS-202
Hydrocarbon blend content % by weight	ASTM D4 (mod.)	50% min.	51%	52%
Inert mineral filler % by weight	AASHTO T111	30% min.	35%	35%
Volatile Matter % by weight	ASTM D6	.2% max.	1.2	1.2
Specific Gravity, 77°F	ASTM D71	1.15-1.50	1.25	1.20
Ductility, 77°F.	ASTM D113	5.0 min.	10	12
Penetration, cone, 77°F, 150 gm. 5 sec.	ASTM D217	50-100	55-60	60-65
Penetration, cone, 32°F, 150 gm. 5 sec.	ASTM D217	40 mm	40-45	50-55
Flash point, C.O.C., °F	ASTM D92	350°F min.	450°	425°F
Fire point, C.O.C., °F	ASTM D92	375°F min.	475°	450°F

IMMERSION TESTING

- 30-Day Immersion Testing: No visible deterioration when tested in 5% Caustic Potash, 5% Hydrochloric Acid, 5% Sulphuric Acid, and 5% saturated Hydrogen Sulfide.*
- One Year Immersion Testing: No visible deterioration when tested in 5% Formaldehyde, 5% Formic Acid, 5% Sulfuric Acid, 5% Hydrochloric Acid, 5% Sodium Hydroxide, 5% Hydrogen Sulfide and 5% Potassium Hydroxide.

* Requirements of ASTM C-990 Standard Specification for Joints for Concrete Pipe, Manholes, and Precast Box Sections Using Preformed Flexible Joint Sealants.

INSTALLATION INSTRUCTIONS

1. CLEAN SURFACE

2. APPLY

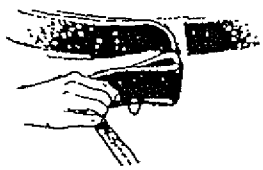

3. BUTT AT JOINT

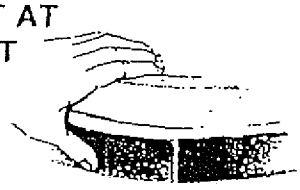

LIMITED WARRANTY

This information is presented in good faith, but we cannot anticipate all conditions under which this information and our products, or the products of other manufacturers in combination with our products, may be used. We accept no responsibility for results obtained by the application of this information or the safety and suitability of our products, either alone or in combination with other products. Users are advised to make their own tests to determine the safety and suitability of each such product or product combinations for their own purposes. It is the users' responsibility to satisfy himself as to the suitability and completeness of such information for this own particular use. We sell this product without warranty, and buyers and users assume all responsibility and liability for loss or damage arising from the handling and use of this product, whether used alone or in combination with other products.

Active members of the Adhesive and Sealant Council

CONFIDENTIAL

CONCRETE SEALANTS INC.

ConSeal™

Solving Concrete Sealing Problems.

SEAL OF SECURITY

BOND OF TRUST ™

ConSeal

Butyl Sealant For Precast Structures

CS-102
CS-202

APPLICATIONS

- For self-sealing joints in:
  - Manholes
  - Concrete Vaults
  - Box Culverts
  - Septic Tanks
  - Concrete Pipe
  - Utility Vaults
  - Vertical Panel Structures
  - Burial Vaults

SEALING PROPERTIES

- Provides permanently flexible watertight joints.
- Low to high temperature workability:
  - CS-102 . . . 30° F to 120° F (-1° C to 48° C).
  - CS-202 . . . 0° F to 120° F (-12° C to 48° C)
- Rugged service temperature: -30° F to +200° F (-34° C to +93° C)
- Excellent chemical and mechanical adhesion to clean, dry surfaces.
- Sealed joints will not shrink, harden or oxidize upon aging.
- No priming normally necessary. When confronted with difficult installation conditions, such as wet concrete or temperatures below 40° F (4° C), priming the concrete will improve the bonding action. Consult Concrete Sealants for the proper primer to meet your application.

HYDROSTATIC STRENGTH

- Both ConSeal CS-102 and CS-202 meet the hydrostatic performance requirement as set forth in ASTM C-990 section 10.1. (Performance requirement: 10psi for 10 minutes in straight alignment — in plant, quality control test for joint materials.)

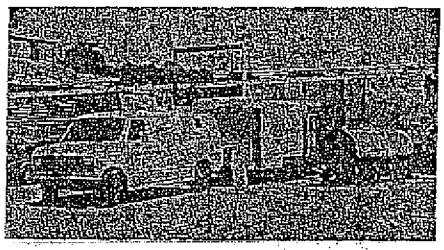

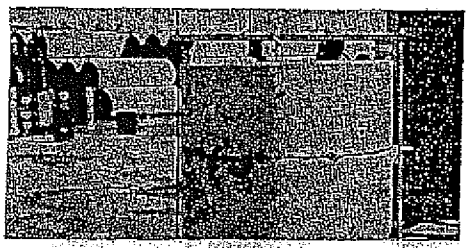

Any Size, Shape, Length, or Material to meet specified requirements.

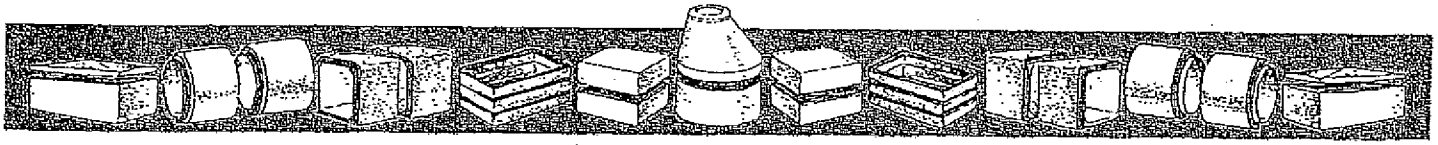

CONCRETE SEALANTS INC.
8917 S. Palmer Road, P.O. Box 176, New Carlisle, Ohio 45344
(513) 845-8776 • FAX (513) 845-3587 • (800) 332-7325

CONFIDENTIAL

Model 5110M1 with pedestal base

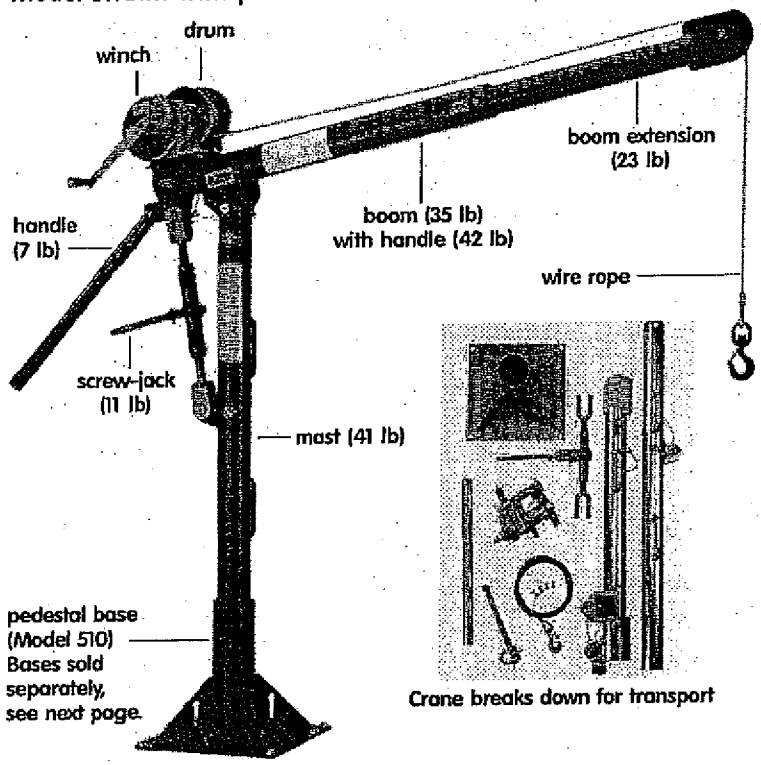

Crane breaks down for transport

Series 5110 Portable Davit Cranes

Hand or Power Winch Operation
Up to 1000 lb capacity

Ordering your crane is as easy as 1...2...3... Select the option that best suits your needs for each item. Fill in the boxes below to create your crane part number.

1 Crane	2 Optional Winch	3 Finish*
5110		

i.e. 5110M2GAL

*Leave blank for standard powder coat finish

4 Order your **Base, Wire Rope Assembly** and **Optional Accessories** separately. See next page.

- **Two-year Limited Warranty**

Crane Model

- **Crane Rotates 360°** on a pin and sleeve bearing in the base. Handle on the boom makes rotation easy.
- **Adjustable Boom** telescopes to 4 different lengths, and adjusts in height while under load with ratchet style screw-jack.
- **Crane Breaks Down** for storage or transport.

1 Crane Model 5110 – Section 4

base model	description	approx. ship wt.
5110[1]	up to 1000 lb – portable davit	160 lb

Please contact factory or nearest Thern Distributor for firm fixed price and delivery.

[1] **Base Model includes corrosion resistant electrostatic powder coated finish. Other finishes available see Option 3.**

Winch Models

- **Hand Winch Operated Models** include spur gear or worm gear hand winch with brake for load control. Model M2 winch can be drill driven, 400 rpm max.
- **Power Winch Operated Models** include electric winch with pendant control and brake. Other power options available, please contact factory.
- **Quick Disconnect Anchor** for quickly attaching or removing wire rope equipped with a swaged ball fitting.

2 Winch Options – Section 4

winch	description	approx. ship wt.
M1	M4312PB-K – zinc plated spur gear hand winch	28 lb
M2[2]	4WM2-K – worm gear hand winch	42 lb
M3	M4312PBSS-K – stainless steel spur gear hand winch	28 lb
E2[3]	4WP2-K electric winch – 115/1/60 VAC with 6 ft pendant control, see pg. 10, model 4WP2 for details	85 lb
E4[3]	4777-K electric winch – 115/1/60 VAC with 6 ft pendant control, see pg. 14, model 4777 for details	110 lb
E4DC[3]	4777DC-K electric winch – 12 volt DC with 10 ft pendant control, see pg 14, model 4777DC for details	105 lb

[2] Winch finish is powder coated, for epoxy finish contact factory.
[3] Winch finish is enamel, for epoxy finish contact factory.

Optional Finishes

- **Galvanized Finish** provides extra protection against corrosion.
- **Stainless Steel Models** are constructed from all stainless steel with an electro-polished finish for superior corrosion resistance.

3 Optional Finish (crane only) – Section 4

finish	description
GAL	galvanized finish – crane only
SS	stainless steel construction – crane only

Thern products are not for lifting people or things over people.

CONFIDENTIAL

4 Series 5110 Bases, Wire Rope Assemblies and Accessories

INDEPENDENT BASES – sold separately

- **Pedestal, Socket, or Wall** mount style.
- **Wheel Base** for floor crane operation. Base legs adjust in length and width. See Model 510R.
- **Important:** Base installation is purchaser's responsibility. Thern recommends consulting a civil engineer or other qualified professional. Contact factory for installation guidelines.

Independent Bases – Section 4

base	description	approx. ship wt.
510	pedestal base – powder coat finish (upright mount)	52 lb
510GAL	pedestal base – galvanized finish (upright mount)	52 lb
510SS	pedestal base – stainless steel (upright mount)	52 lb
510F	socket base – powder coat finish (flush mount)	45 lb
510FGAL	socket base – galvanized finish (flush mount)	45 lb
510SSF	socket base – stainless steel (flush mount)	45 lb
510W	wall mount base – powder coat finish	52 lb
510WGAL	wall mount base – galvanized finish	52 lb
510SSW	wall mount base – stainless steel	52 lb
510R	wheel base – enamel finish	313 lb

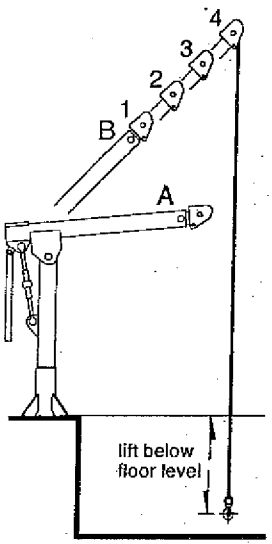

Important:
It is the owner's or operator's responsibility to determine the suitability of the equipment to its intended use. Study all applicable codes, manuals, and regulations. Be sure to read the Owner's Manual supplied with the equipment before operating it.

WIRE ROPE ASSEMBLIES – sold separately

- **Galvanized or Stainless Steel** wire rope assemblies with swaged ball fitting to work with the quick disconnect anchor on the winch.

Wire Rope Assemblies – Section 9

model number	wire rope diameter x length	approx. ship weight
galvanized aircraft cable with swivel hook and swaged ball fitting		
WA25-20NS	1/4 in x 20 ft	4 lb
WA25-28NS	1/4 in x 28 ft	5 lb
WA25-36NS	1/4 in x 36 ft	6 lb
WA25-45NS	1/4 in x 45 ft	7 lb
WA25-60NS	1/4 in x 60 ft	9 lb
WA25-75NS	1/4 in x 75 ft	10 lb
304 stainless steel wire rope with SS eye hook and swaged ball fitting - swivel hook also available please contact factory		
WS25-20NE	1/4 in x 20 ft	5 lb
WS25-28NE	1/4 in x 28 ft	5 lb
WS25-36NE	1/4 in x 36 ft	6 lb
WS25-45NE	1/4 in x 45 ft	7 lb
WS25-60NE	1/4 in x 60 ft	8 lb
WS25-75NE	1/4 in x 75 ft	10 lb

ACCESSORIES – Section 4

Base Cover – plastic cover fits in the mast hole in the base to help keep water from collecting inside the base when the crane is removed.
Model No. TK3P

Cable Spool – 316 stainless steel reel winds up wire rope when detached from crane.
Model No. RW50 **12 lb**

Wire Rope Keeper – metal bracket attaches to base or other structure to hold free end of the wire rope when detached from crane.
Model No. B1766

Drill-Motor Drive – 7 amp, 400 rpm drill-motor to power drive the hand winch. Only available for cranes configured with the M2 winch option. 120 VAC drill-motor includes 1-1/8" hex socket drive.
Model No. ED120BD **12 lb**

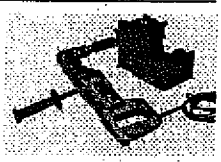

Series 5110 Performance Characteristics

wire rope dia.	wire rope length	load rating for 5110M1 and M3 position 1	position 2	position 3	position 4	load rating for 5110M2, E2, E4, and E4DC position 1	position 2	position 3	position 4	lift below floor level (min – max)[1]
1/4 in	20 ft	1000 lb	700 lb	600 lb	500 lb	1000 lb	700 lb	600 lb	500 lb	1 – 5 ft
1/4 in	28 ft	1000 lb	700 lb	600 lb	500 lb	1000 lb	700 lb	600 lb	500 lb	9 – 13 ft
1/4 in	36 ft	1000 lb	700 lb	600 lb	500 lb	1000 lb	700 lb	600 lb	500 lb	17 – 21 ft
1/4 in	45 ft	1000 lb	700 lb	600 lb	500 lb	1000 lb	700 lb	600 lb	500 lb	26 – 30 ft
1/4 in	60 ft	1000 lb	700 lb	600 lb	500 lb	1000 lb	700 lb	600 lb	500 lb	41 – 45 ft
1/4 in	75 ft	–	–	–	–	1000 lb	700 lb	600 lb	500 lb	56 – 60 ft

[1] Lift below floor level varies depending on boom position and base configuration. For longer lifts, please contact factory.

See Dimensions on Next Page

CONFIDENTIAL

5110 with pedestal base mounted upright

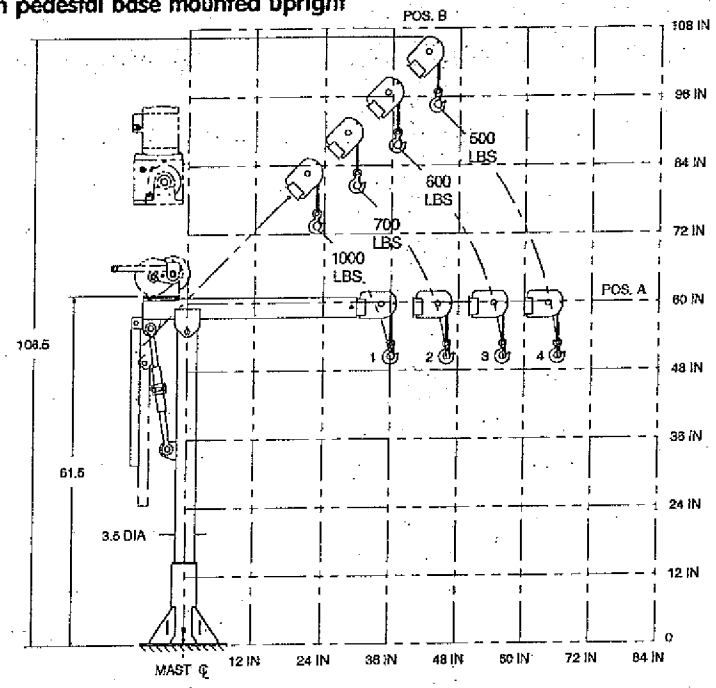

5110 Upright – Height and Reach

boom position	hook reach	hook height
A-1	36 in	50 in
A-2	46 in	50 in
A-3	56 in	50 in
A-4	66 in	50 in
B-1	23 in	73 in
B-2	30 in	80 in
B-3	37 in	87 in
B-4	44 in	94 in

Dimensions are for reference only and subject to change without notice.

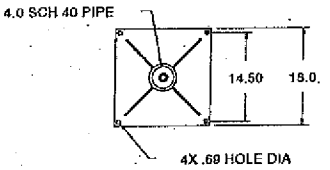

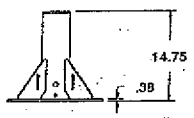

5110 with wall mount base or socket base mounted flush

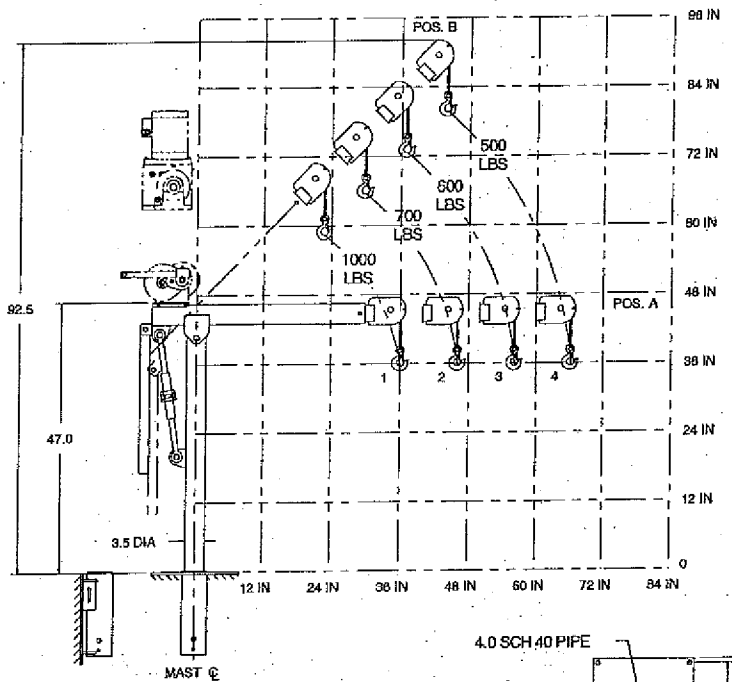

5110 Flush – Height and Reach

boom position	hook reach	hook height
A-1	36 in	36 in
A-2	46 in	36 in
A-3	56 in	36 in
A-4	66 in	36 in
B-1	23 in	59 in
B-2	30 in	66 in
B-3	37 in	73 in
B-4	44 in	80 in

Dimensions are for reference only and subject to change without notice.

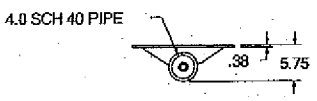

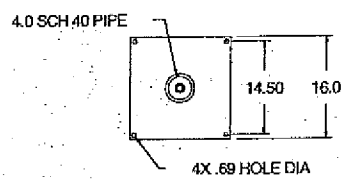

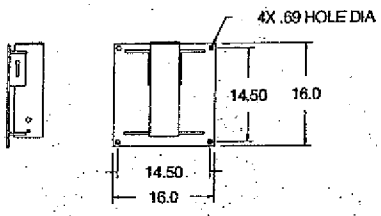

See Additional Dimensions on Next Page

Thern products are not for lifting people or things over people.

CONFIDENTIAL

5110 with Model 510R wheel base

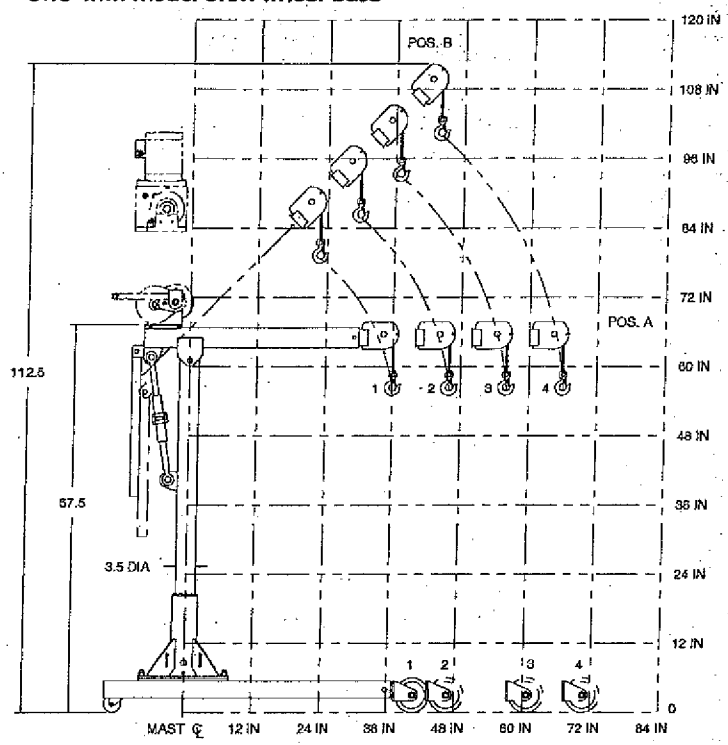

5110 with 510R Wheel Base – Height and Reach

boom position	hook reach	hook height
A-1	36 in	56 in
A-2	46 in	56 in
A-3	56 in	56 in
A-4	66 in	56 in
B-1	23 in	79 in
B-2	30 in	86 in
B-3	37 in	93 in
B-4	44 in	100 in

Dimensions are for reference only and subject to change without notice.

Important:
Crane DOES NOT rotate in base when assembled in 510R wheel base.

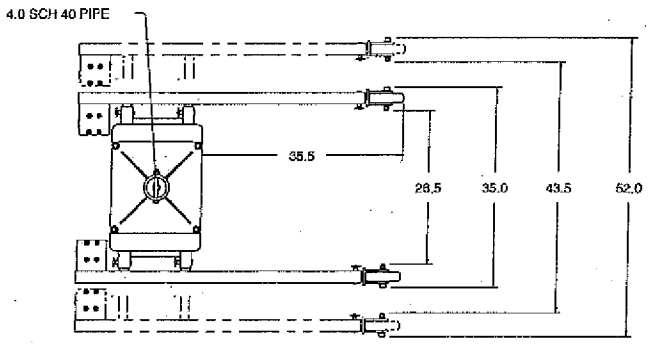

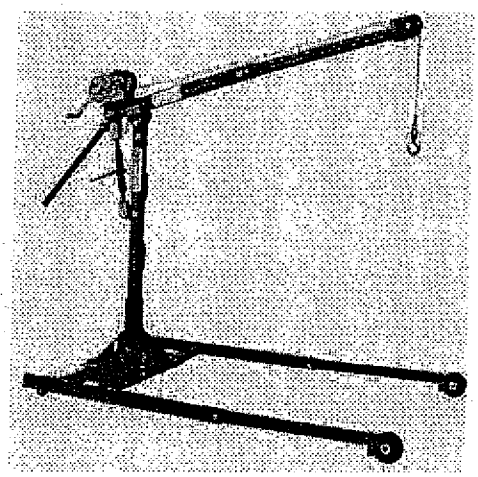

Wheel Base sold separately for floor crane operation. See Wheel Base Model 510R on page 35.

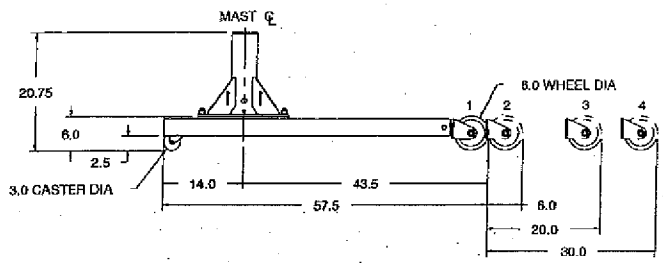

Load Ratings for 5110 with 510R Wheel Base

Crane Load Ratings	Leg Position 1	Leg Position 2	Leg Position 3	Leg Position 4
Boom Position 1	1000 lb	1000 lb	1000 lb	1000 lb
Boom Position 2	700 lb	700 lb	700 lb	700 lb
Boom Position 3	do not use	600 lb	600 lb	600 lb
Boom Position 4	do not use	500 lb	500 lb	500 lb

Important:
It is the owner's or operator's responsibility to determine the suitability of the equipment to its intended use. Study all applicable codes, manuals, and regulations. Be sure to read the Owner's Manual supplied with the equipment before operating it.

CONFIDENTIAL

APPENDIX E

OFFICE BUILDING PUMP STATION

CONFIDENTIAL

GP2014

NO BAFFLE

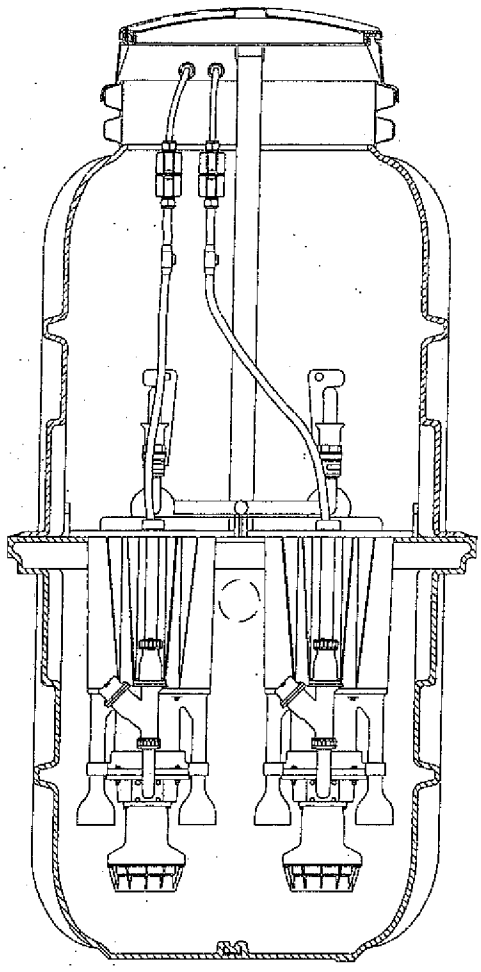

Patent Numbers: 5,752,315 5,562,254 5,439,180

* Discharge data includes loss through check valve, which is minimal

PA1348P02 Rev. -, 3/03

General Applications

The size, efficiency and operating economy of the GP 2014 make it an ideal choice for multiple dwellings, waterfront property, subdivision developments and marinas. The GP 2014 is ideally suited for both new and existing communities.

General Features

The GP 2014 Grinder Pump is a complete unit that includes: two grinder pumps with check valves, HDPE (high density polyethylene) tank and controls. The GP 2014 is packaged into a single complete unit, ready for installation.

All solids are ground into fine particles, allowing them to pass easily through the pump, check valve and small-diameter pipelines. Even objects that are not normally found in sewage, such as plastic, rubber, fiber, wood, etc., are ground into fine particles.

The 1 1/4-inch discharge connection is adaptable to any piping materials, thereby allowing it to meet local code requirements.

The tank is made of tough corrosion-resistant HDPE. The optimum tank capacity of 150 gallons is based on computer studies of water usage patterns. A single GP 2014 is ideal for up to four average, single-family homes, and can also be used for up to 12 average, single-family homes with the consent of the factory. This model can accommodate flows of 3000 GPD.

The internal check valve assembly, located in each grinder pump, is custom-designed for non-clog, trouble-free operation.

The grinder pump is automatically activated and runs infrequently for very short periods. The annual energy consumption is typically that of a 40-watt light bulb.

Units are available for indoor and outdoor installations. Outdoor units are designed to accommodate a wide range of burial depths.

Operational Information

Motor

1 hp, 1,725 rpm, high torque, capacitor start, thermally protected, 120/240V, 60 Hz, 1 phase

Inlet Connections

4-inch inlet grommet standard for DWV pipe. Other inlet configurations available from the factory.

Discharge Connections

Pump discharge terminates in 1 1/4-inch NPT female thread. Can easily be adapted to 1 1/4-inch PVC pipe or any other material required by local codes.

*Discharge**

15 gpm at 0 psig (per pump)

11 gpm at 40 psig (per pump)

9 gpm at 60 psig (per pump)

Control Panel

This station is designed to use the Alternating Control Panel, MOD T260.

Overload Capacity

The maximum pressure that the pump can generate is limited by the motor characteristics. The motor generates a pressure well below the rating of the piping and appurtenances. The automatic reset feature does not require manual operation following overload.

CONFIDENTIAL

Central Plastics Company
1901 W. Independence St.
Shawnee, OK USA 74801
www.centralplastics.com

Phone: 800-664-3872
405-273-6302
Fax: 800-733-5993
405-273-5993

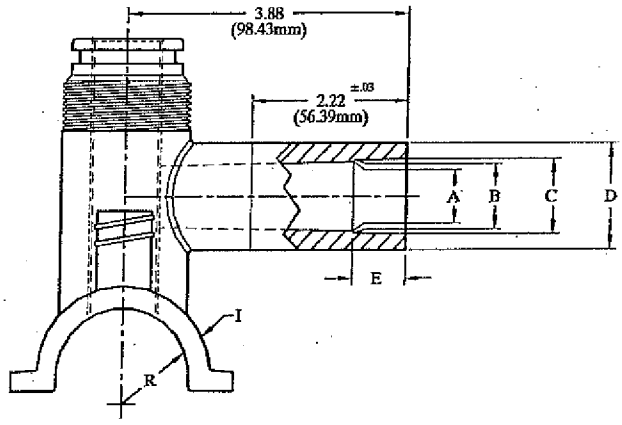

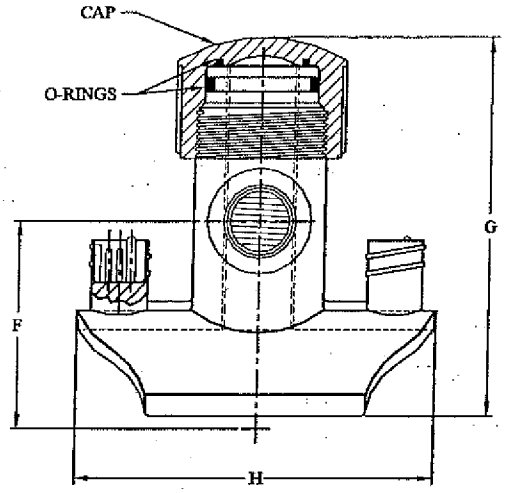

SOCKET FUSION OUTLET TABLE

NOMINAL PIPE OUTLET SIZE	A DIAMETER	B DIAMETER	C DIAMETER	D DIAMETER (REF.)	E DIMENSION
1/2" CTS	0.56	0.575 +.010 -.007	0.585 +.010 -.007	1.315	0.650 ±.015
	14.2 mm	14.61 mm	14.86 mm	33.40 mm	16.51 mm
3/4" IPS	0.94	1.012 +.008 -.012	1.020 ±.008	1.460	0.725 ±.015
	23.9 mm	25.70 mm	25.91 mm	37.08 mm	18.42 mm

GENERAL INFORMATION TABLE

NOMINAL PIPE SADDLE SIZE	RADIUS R	DIMENSION F	DIMENSION G	DIMENSION H	DIMENSION I
1 1/4" IPS	0.830 ±.012	2.20	4.83	4.58	0.313
	21.08 mm	55.9 mm	122.7 mm	116.3 mm	7.95 mm
1 1/2" IPS	0.950 ±.012	2.35	4.94	4.50	0.335
	24.13 mm	59.7 mm	125.5 mm	114.3 mm	8.51 mm
2" IPS	1.188 ±.012	2.48	5.06	4.50	0.335
	30.16 mm	63.00 mm	128.5 mm	114.3 mm	8.51 mm
3" IPS	1.750 ±.012	2.74	5.18	4.58	0.335
	44.45 mm	69.6 mm	131.6 mm	116.3 mm	8.51 mm
4" IPS	2.250 ±.012	3.69	5.93	4.46	0.335
	57.15 mm	93.7 mm	150.6 mm	113.3 mm	8.51 mm
4" DIPS	2.400 ±.012	3.69	5.93	4.46	0.335
	60.96 mm	93.7 mm	150.6 mm	113.3 mm	8.51 mm
6" IPS	3.313 ±.012	4.77	7.06	4.61	0.370
	84.1 mm	121.2 mm	179.3 mm	117.1 mm	9.40 mm
6" DIPS	3.450 ±.012	4.77	7.06	4.61	0.370
	87.63 mm	121.2 mm	179.3 mm	117.1 mm	9.40 mm

4.7mm SINGLE PIN FITTINGS ALSO AVAILABLE

TTSOCKI.xls
4/30/2003

CONFIDENTIAL

APPENDIX F

PATT's and FET's

Tioga Downs WWTP
Septic Tank Sizing

Calculated by	CBB	3/26/2008
Checked by	GMC	9/17/2008

Based Table 8 of NYSDEC - Design Standards for Waterwater Treatment Works (1988)
Design flow will be larger than 15,000 gpd therefore tank volume to equal design flow.

Design Flow - Q (gpd)	75,000	
Liquid depth (in)	60	(must be between 30 and 60 inches)
Sludge Storage Depth (in)	0	(in addition to liquid depth)

Design requirements
1) Tank surface area should range between 2.7 and 5.3 square feet per 100 gallons of tank capacity
2) Ratio of effective tank length to width shall be 2:1 to 4:1 with a min. effective length of 6 feet

Required area (ft^2)	2005	(based on depth and daily design flow - Q)

Tank Surface Area (ft^2/100gal)	2.7

Propose two septic tanks to be installed in parallel (two flow trains)

Tank Volume - each (gal)	37,500	
Liquid Depth (in)	60	
Required area (ft^2)	1003	(based on depth and daily design flow - Q)
Tank Surface Area (ft^2/100gal)	2.7	

Propose to use precast concrete culvert-style septic tank, similar to Kon-Structure by Kistner Precast per Kistner catalog, they make 11 chamber tanks with 37,000 gal capacity, use two of them

Per catalog, each tank	Effective W	Effective L	Effective H
	12'	82'	6'

CONFIDENTIAL

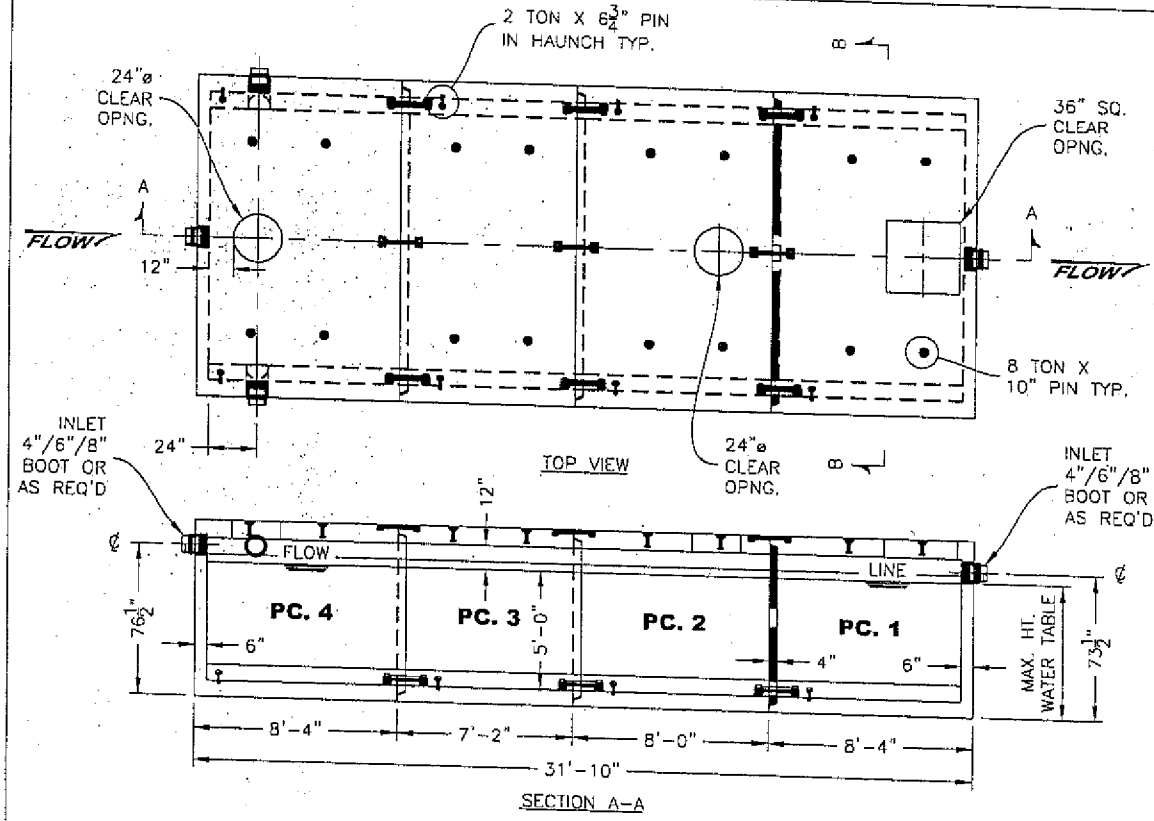

FILL OVER TANK _____

⚠ WARNING

WATER TABLE NO HIGHER THAN INVERT OF OUTLET PIPE.

SPECIFICATIONS:
- CONCRETE: 5000 P.S.I. @ 28 DAYS
- ENTRAINED AIR: 5% – 9%
- STEEL: A.S.T.M. A496-A615 GRADE 60-60 KSI
- DESIGN LOADING: A.A.S.H.T.O. HS-20-44 WITH 30% IMPACT AND EQUIVALENT SOIL PRESSURE OF 130 (PSF). FLOTATION FORCES NOT ACCOUNTED FOR.
- PIPING: INLET/OUTLET TEES AND DROP LEGS SUPPLIED AND INSTALLED BY O.C.

WEIGHT:
- INLET SECTION: 43,517.50 LBS.
- MID-SECTION W/BAFFLE 38,499.27 LBS.
- MID-SECTION W/O BAFFLE: 32,563.71 LBS.
- OUTLET SECTION: 41,604.90 LBS.

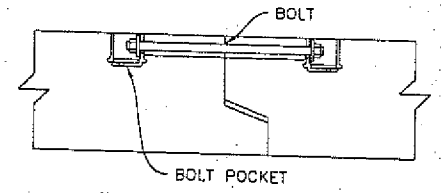

TYPICAL BOLT POCKET DETAIL

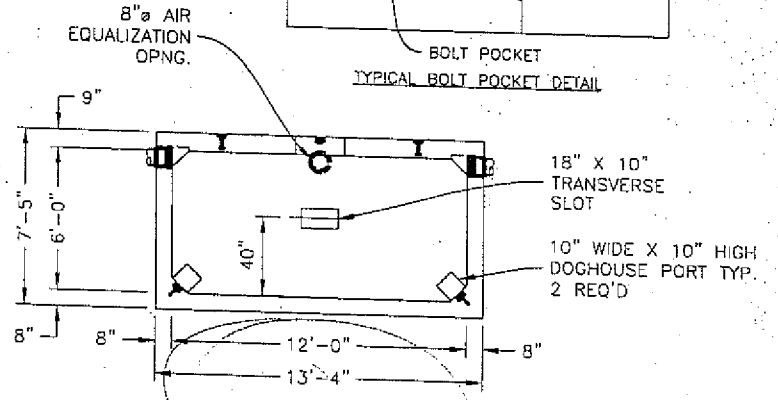

SECTION B-B

✓ CHECK	ITEM	DWG. NUMBER	CHAMBERS	O.A.L.
	10000 GALLON CULVERT TANK	CTN10T	3	24'-8"
	13000 GALLON CULVERT TANK	CTN13T	4	31'-10"
	16000 GALLON CULVERT TANK	CTN16T	5	39'-0"
F.E.T.	20000 GALLON CULVERT TANK	CTN20T	6	46'-2"
	23000 GALLON CULVERT TANK	CTN23T	7	53'-4"
	26000 GALLON CULVERT TANK	CTN26T	8	60'-6"
	30000 GALLON CULVERT TANK	CTN30T	9	67'-8"
	33000 GALLON CULVERT TANK	CTN33T	10	74'-10"
P.A.T.T.	37000 GALLON CULVERT TANK	CTN37T	11	82'-0"
	40000 GALLON CULVERT TANK	CTN40T	12	89'-2"

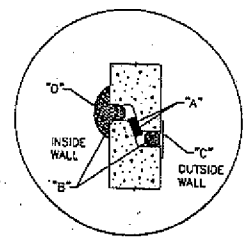

JOINT DETAIL

STANDARD NOTE:
GALLONAGE DETERMINED BY NUMBER OF CHAMBERS. EACH CHAMBER'S HEIGHT, WIDTH AND DEPTH ARE DIMENSIONAL DUPLICATES. EACH UNIT CONTAINS ONE CAST CONCRETE BAFFLE LOCATED 1/4 TO 1/2 OF THE OVERALL LENGTH.

NOTE:
ABOVE DETAILS DEPICT A 13000 GALLON CULVERT TANK. OTHER SIZES AVAILABLE. CHECK YOUR REQUIREMENTS FROM BELOW.

GENERAL NOTES:
- "A" – GASKET BY K.C.P.
- "B" – WATERPLUG BY O.C.
- "C" – 6" BUTYL WRAP WITH BACKING PRIMED FOR INSTALLATION BY O.C.
- "D" – TAR BY O.C.

"A", "B", "C" & "D" AVAILABLE THROUGH KISTNER CONCRETE, PURCHASED AND INSTALLED BY CONTRACTOR.

JOINT DETAILS FOR WATERTIGHT INSTALLATION.

NOTE: NON-POTABLE INSTALLATIONS ONLY.

ABOVE INFORMATION IS SUPPLIED FOR CONTRACTOR KNOWLEDGE. CONTRACTOR IS RESPONSIBLE FOR PROPER APPLICATION AND ULTIMATE WATERTIGHT INSTALLATION OF STRUCTURE.

"A" JOINT SEALANT
"RUBBER PROFILE GASKET" MEETS FEDERAL SPECIFICATION SS-S-00210 (210-A) AASHTO M-198
SERVICE TEMP: -65° TO +200°F

PROCEDURE:
1) INSTALL STRUCTURE BOTTOM SECTION.
2) LOCATE RUBBER PROFILE GASKET JOINT SEALANT "A" PER DETAIL.
3) INSTALL NEXT STRUCTURE SECTION.
4) WATERPLUG "B" INTERIOR & EXTERIOR, ALL GAPS.
5) APPLY BUTYL WRAP "C".

☐ Approved
☐ Approved As Noted

By: _____ DATE _____

REV. NO.	DATE	DESCRIPTION

PREPARED FOR:

ACCT #

DATE: 9/10/07
SCALE: 3/16"=1'
SHEET TITLE: PRODUCT LAYOUT
DRAWN BY: DAR
CK'D BY: MJK

PROJECT: 12'-0" SPAN X 6'-0" RISE CULVERT TANK H20988

CONTRACT CWC NO:
PATTERN PROJECT NO: 07KCP051
SHT NO: 2 OF 5
KISTNER DWG NO: 07KCP051-02

KISTNER CONCRETE PRODUCTS, INC.
5550 HINMAN ROAD
LOCKPORT, NEW YORK 14094
PHONE 716-434-8157

PROPRIETARY INFORMATION
ALL RIGHTS OF KISTNER CONCRETE PRODUCTS, INC.

CONFIDENTIAL

⚠ WARNING
WATER TABLE NO HIGHER THAN INVERT OF OUTLET PIPE.

⚠ WARNING
30 TON CAPACITY SLING.
SEE DWG. #LIFT-30TCSL

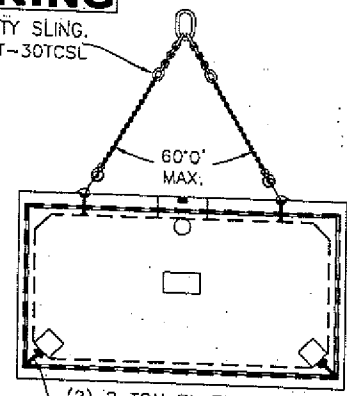

G.C. EQUIPMENT LIST	
QTY	DESCRIPTION
2	LADDER
4	1 1/2" PIPE WRENCH
4	12" CRESCENT WRENCH
5	RIGGING

NOTES:
BELL END ELEMENT MUST BE LEVEL.

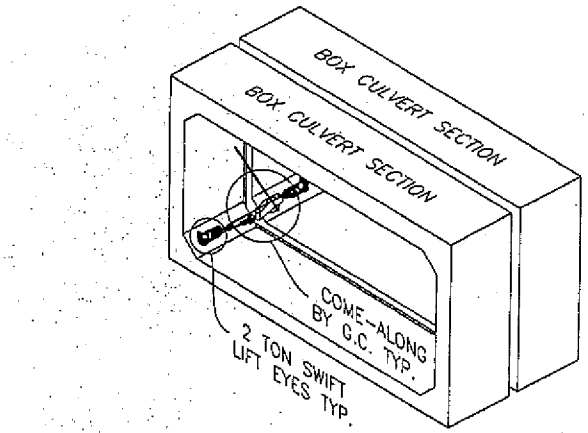

⚠ WARNING

UNITS WILL NOT DRAW TOGETHER IF NOT LEVEL!

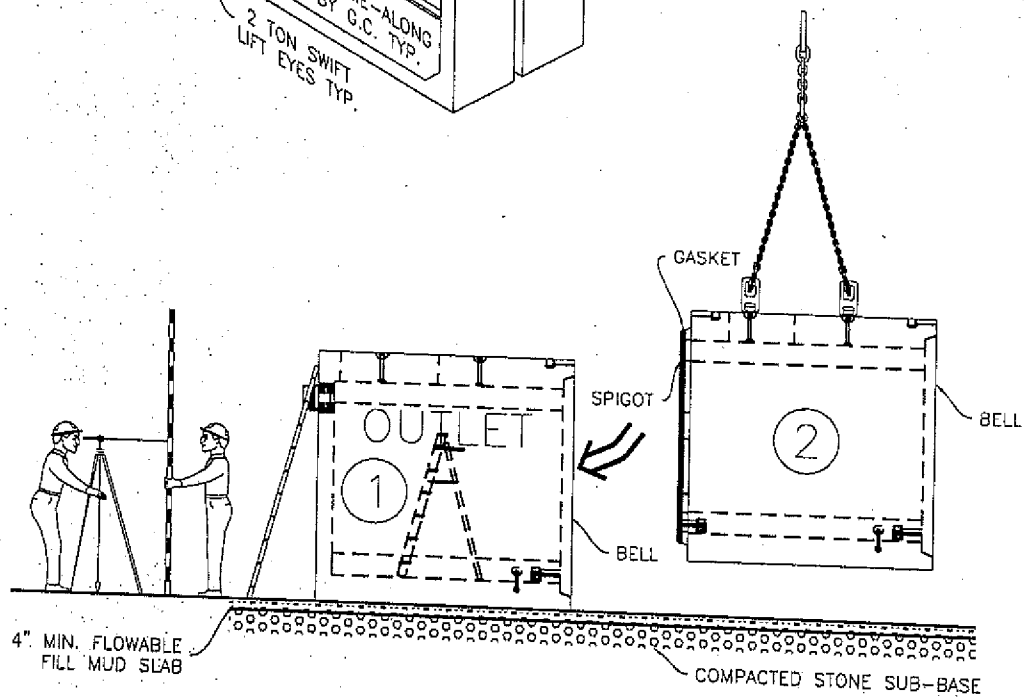

⚠ WARNING **BELL END MUST BE LEVEL.**

☐ Approved
☐ Approved As Noted

By: DATE

REV. NO.	DATE	DESCRIPTION

PREPARED FOR:

ACCT #
DATE: 9/10/07
SHEET TITLE: INSTALLATION PROCEDURE 2
DRAWN BY: DAR
CH'D BY: MJK
SCALE: NONE
PROJECT: 12'-0" SPAN X 6'-0" RISE CULVERT TANK H20988
CONTRACT DWG NO:
KISTNER PROJECT NO: 07KCP051
SHT NO: 4 OF 5
KISTNER DWG NO: 07KCP051-10

KISTNER CONCRETE PRODUCTS, INC.
5550 HINMAN ROAD
LOCKPORT, NEW YORK 14094
PHONE 716-434-8157
PROPRIETARY INFORMATION
ALL RIGHTS OF KISTNER CONCRETE PRODUCTS, INC.

CONFIDENTIAL

EQUIPMENT REQUIRED BY G.C. FOR INSTALLATION:

- 4 OPEN END WRENCHES FOR 1 1/8" NUTS
- 2 PAIR MED–LARGE VISE GRIPS
- 3 PRY BARS
- 2 COME–ALONG – 5–TON 2 CHAIN BINDERS & 2 CHAINS 20' LONG
- 1 CUTOFF SAW

HARDWARE LIST

QTY	DESCRIPTION
3 SETS/JOINT	3/4" ROD x 20" LG. W/2 WASHERS/NUTS

GENERAL NOTES:
"A" – RUBBER PROFILE GASKET BY K.C.P.
"B" – CAULK BY G.C.

"A" & "B" AVAILABLE THROUGH KISTNER CONCRETE. PURCHASED AND INSTALLED BY CONTRACTOR.

NOTE: NON–POTABLE INSTALLATIONS ONLY.

ABOVE INFORMATION IS SUPPLIED FOR CONTRACTOR KNOWLEDGE. CONTRACTOR IS RESPONSIBLE FOR PROPER APPLICATION AND ULTIMATE WATERTIGHT INSTALLATION OF STRUCTURE.

INSTALLATION PROCEDURE:

1. PREPARE DRY EXCAVATION & BEDDING PER CONTRACT SPECIFICATIONS. MFG. RECOMMENDS MIN. 2" GRAVEL ON 4" FLOWABLE FILL MUD SLAB ON COMPACTED SUB–BASE. ALLOW PROPER AREA IN EXCAVATION TO SET TANK.
2. 3/4" X 14'–0" X 4'–0" PLYWOOD SETTING BOARD MUST BE USED.
3. PREPARE BEDDING IN EXCAVATION AT BOTTOM OF PC. #1 FOR SETTING.
4. SET PC. #1 IN EXCAVATION.
5. **WARNING:** SHIM BELL END 1/2" FROM LEVEL.
6. PREPARE LEVEL EXCAVATION FOR PC. #2. HIGH SPOTS WILL PREVENT INSTALLATION.
7. INSTALL SETTING BOARD & CLEAN. PREPARE COME–ALONGS PER DETAIL. CROSS RIG WHERE POSSIBLE.
8. HANG PIECE #2 TIPPING INTO FRONT OF PC. #1. DRAW TOGETHER WITH COME–ALONG. WHILE TENSION IS STILL ON CRANE, GUIDE TOGETHER.
9. INSTALL PC. #2. DRAW FULLY TOGETHER WITH BOLT POCKET SYSTEM, 1/2" TO 1/4" GAP MAX. BEFORE RELEASING TENSION ON CABLES.
10. REPEAT PROCEDURE UNTIL ENTIRE TANK IS COMPLETE.

MATERIALS:

TANK – K.C.P.
RUBBER PROFILE GASKET MATERIAL
NONSHRINK GROUT – G.C.

11. AFTER COMPLETE INSTALLATION, G.C. TO CAULK INSIDE & OUTSIDE OF JOINTS, FILLING ALL GAPS SMOOTH.
12. TAR INTERIOR JOINTS – BOTTOM & SIDES AFTER FINISH OF GROUTING OF ALL GAPS SMOOTH.
13. FINISHED JOINT – SEE JOINT DETAIL (FILL ANGULAR SPACE WITH "WATERPROOFING–FOAM".
14. MANUFACTURER RECOMMENDS CONTRACTOR TO BACKFILL WITH IMPERVIOUS MATERIAL AROUND TANK AND DAM INLET PIPE TRENCH PATH.
15. EQUIPMENT MUST NEVER BE USED TO FORCE TANK SECTIONS TOGETHER. IF DIFFICULTY IS ENCOUNTERED, REMOVE SECTION AND REPEAT PREVIOUS STEPS. CALL KISTNER'S SALES & ENGINEERING DEPARTMENT IMMEDIATELY.
16. MANUFACTURER RECOMMENDS WATER TESTING AFTER BACKFILL PRIOR TO SERVICING.
17. **TANKS DESIGNED FOR STATIC WATER LEVEL NON–PRESSURIZED.**

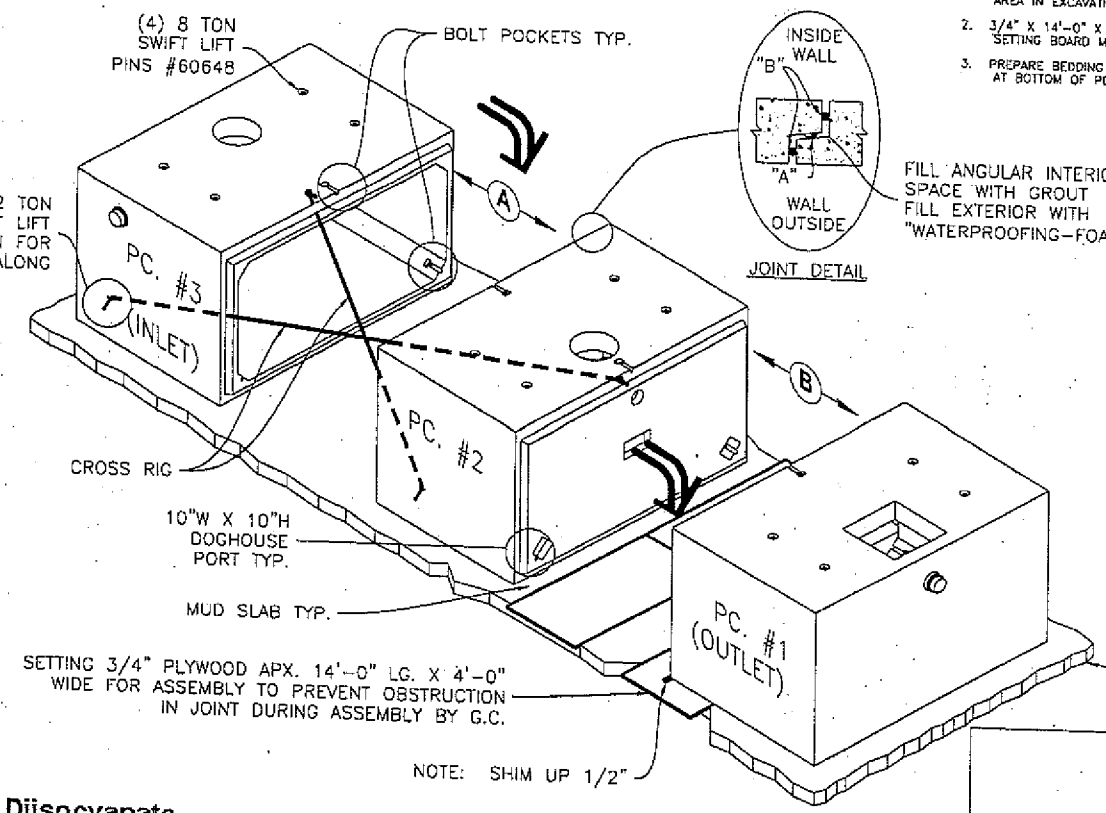

JOINT DETAIL

FILL ANGULAR INTERIOR SPACE WITH GROUT FILL EXTERIOR WITH "WATERPROOFING–FOAM"

4" MIN. FLOWABLE FILL MUD SLAB ON COMPACTED SUB–BASE

⚠ WARNING
WATER TABLE NO HIGHER THAN INVERT OF OUTLET PIPE.

DRY EXCAVATION

THE ABOVE INSTALLATION DETAILS ARE RECOMMENDATIONS ONLY, FINAL INSTALLATION PREPARATIONS ARE THE RECOMMENDATIONS OF THE PROJECT ENGINEER AND THE CONTRACTOR. THIS IS ESTABLISHED FOR THE WORSE CASE SCENARIO.

Polyurethane - Polymetric Diisocyanate

WARNING !!!

FOR WATERTIGHT INSTALLATION –SPECIAL ATTENTION AND CARE SHOULD BE TAKEN DURING INSTALLATION OF WATERPROOFING FOAM.

"Waterproofing-Foam" should be installed as a "CONTINUOUS BAND" of "Polyurethane – Polymetric Diisocyanate" in the Angular Space – formed by Gasket and interior grout seal – Between Each Section.
Installation should be performed from interior of tank. It is **critical** that a "CONTINUOUS BAND" of "Polyurethane - Polymetric Diisocyanate" is installed in the Angular Space of joint - the entire circumferential distance around joint - Between Each Section.

☐ Approved
☐ Approved As Noted

By: DATE

REV. NO.	DATE	DESCRIPTION

PREPARED FOR:

ACCT#

DATE: 9/10/07
SHEET TITLE: INSTALLATION PROCEDURE 1
DRAWN BY: DAR
CHK'D BY: MJK
SCALE: NONE
PROJECT: 12'-0" SPAN X 6'-0" RISE CULVERT TANK H20988
CONTRACT DWG NO:
SHT NO: 3 OF 5
ANOTHER PROJECT NO: 07KCP051
KISTNER DWG NO: 07KCP051-09

KISTNER CONCRETE PRODUCTS, INC.
5550 HINMAN ROAD
LOCKPORT, NEW YORK 14094
PHONE 716-434-6157

PROPRIETARY INFORMATION
ALL RIGHTS OF KISTNER CONCRETE PRODUCTS, INC.

CONFIDENTIAL

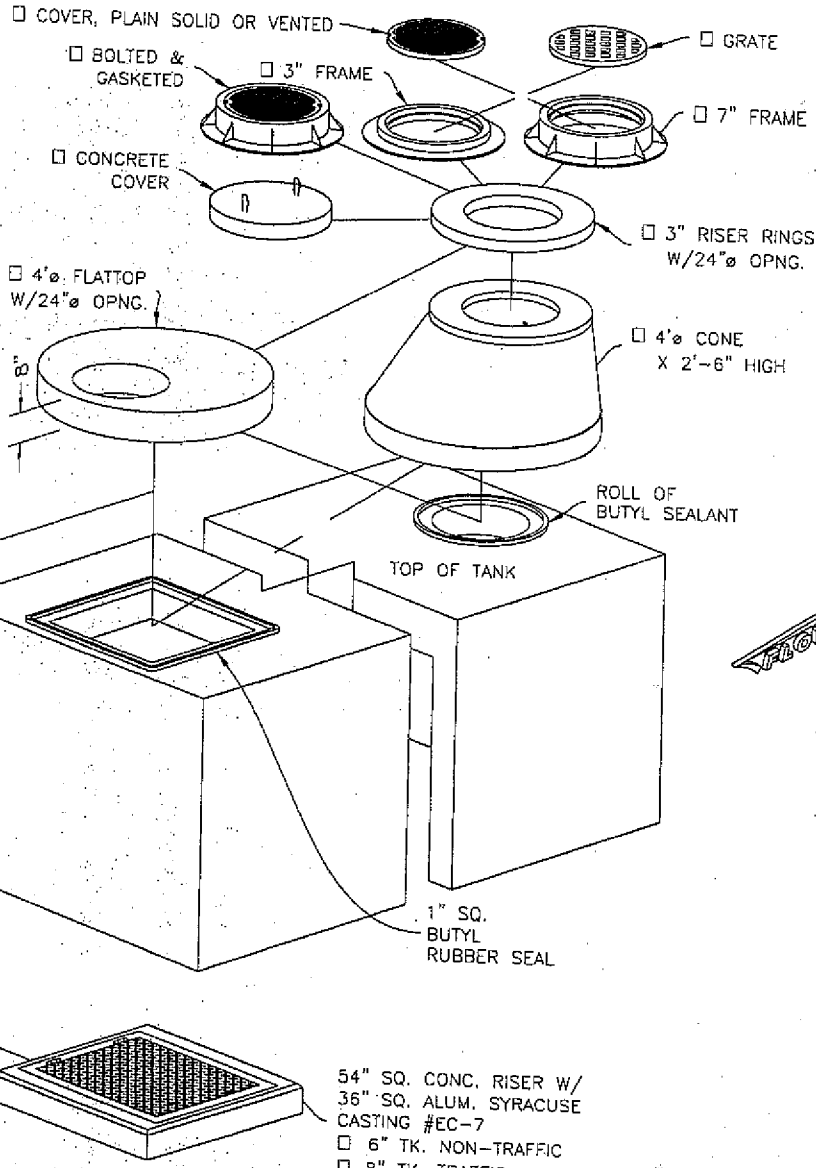

EXPLODED ISO VIEW

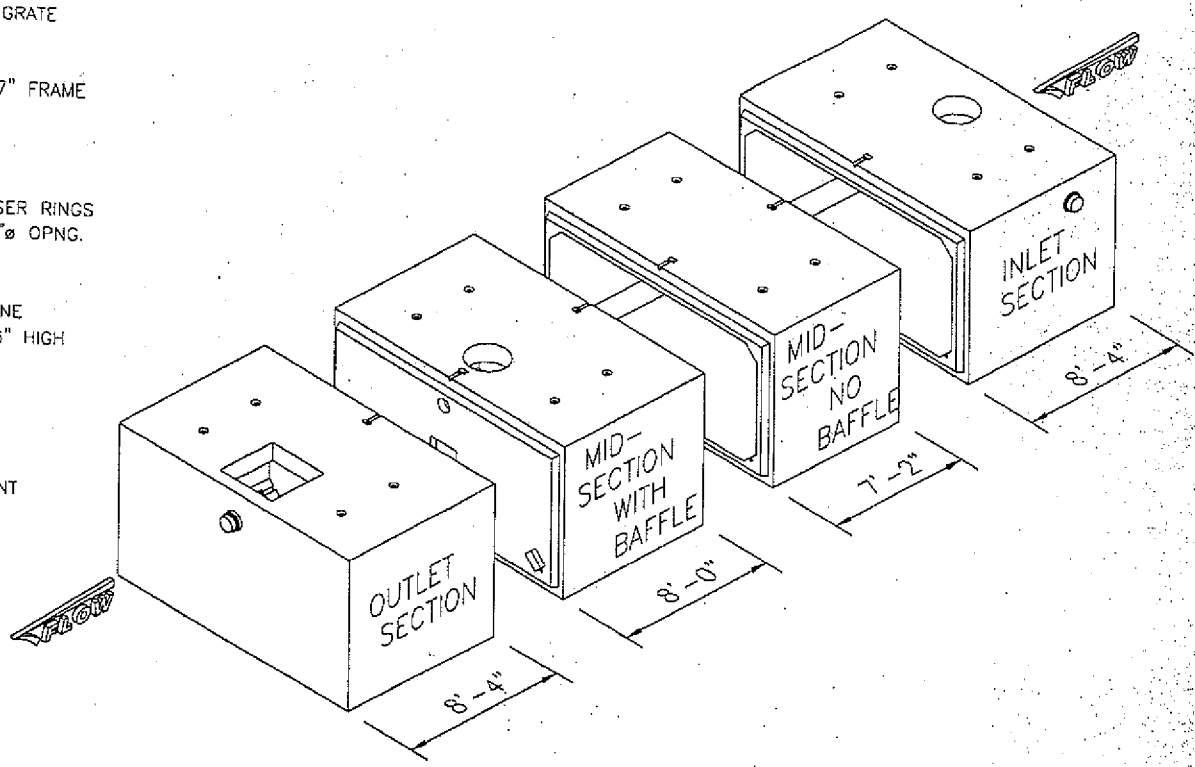

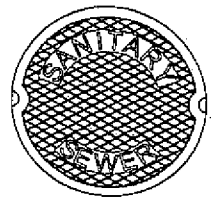

"SANITARY" SOLID

☐ Approved
☐ Approved As Noted

By: DATE

REV. NO.	DATE	DESCRIPTION

PREPARED FOR:

ACCT#

DATE: 9/10/07
SHEET TITLE: EXPLODED ISO VIEW & ACCESSORIES
DRAWN BY: DAR
SCALE: NONE
CK'D BY: MJK
PROJECT: 12'-0" SPAN X 6'-0" RISE CULVERT TANK H20988

CONTRACT DWG. NO.:
KISTNER PROJECT NO: 07KCP051
SHT NO: 5 OF 5
KISTNER DWG. NO: 07KCP051-11

KISTNER CONCRETE PRODUCTS, INC.
5550 HINMAN ROAD
LOCKPORT, NEW YORK 14094
PHONE 716-434-6157

PROPRIETARY INFORMATION
ALL RIGHTS OF KISTNER CONCRETE PRODUCTS, INC.

CONFIDENTIAL

Tioga Downs WWTP
Equalization Basin Sizing

Calculated by CBB 3/26/2008
Checked by GMC 9/17/2008

Basis of Design

Design Flow 75,000 gpd
Runoff Period 15 hours

Time Period	Interval	Flowrate During Time Period (gph)	Cumulative Volume Flow at End of Time Period (gal)	Cumulative Volume Flow at End of Time Period (galx10^3))
M-1	0	5,000	75,000	75.0
1-2	1	0	0	0
2-3	2	0	0	0
3-4	3	0	0	0
4-5	4	0	0	0
5-6	5	0	0	0
6-7	6	0	0	0
7-8	7	0	0	0
8-9	8	0	0	0
9-10	9	0	0	0
10-11	10	5,000	5,000	5.0
11-N	11	5,000	10,000	10.0
N-1	12	5,000	15,000	15.0
1-2	13	5,000	20,000	20.0
2-3	14	5,000	25,000	25.0
3-4	15	5,000	30,000	30.0
4-5	16	5,000	35,000	35.0
5-6	17	5,000	40,000	40.0
6-7	18	5,000	45,000	45.0
7-8	19	5,000	50,000	50.0
8-9	20	5,000	55,000	55.0
9-10	21	5,000	60,000	60.0
10-11	22	5,000	65,000	65.0
11-M	23	5,000	70,000	70.0

per the Cumulative Volume Chart, required equalization volume is 38,400 gal
19200

using the same effective width and depth dimensions as the proposed septic tanks, and two equalization tanks

	W (ft)	12 (two tanks side by side)
	Depth (ft)	6
Required	L (ft)	35.7

CONFIDENTIAL

APPENDIX G

TEST RESULTS and RBC CALCULATIONS

CONFIDENTIAL

CONFIDENTIAL

Tioga Downs Racino
Effluent Manhole, 24 hour composite sample

Parameter	Units	5/8/2008	5/12/2008	5/22/2008	Average
BOD	mg/l	581	575	599	585
TSS	mg/l	152	120	128	133.3333
TDS	mg/l	1340	1500	1320	1386.667
Ammonia as N	mg/l	81.2	97.6	87.3	88.7
Nitrate/Nitrite as N	mg/l	0.2	0.05	0.05	0.1
Phosphate	mg/l	10.1	12.6	10.8	11.16667
TKN	mg/l	96.4	102	130	109.4667
Calcium	mg/l	124	133	113	123.3333
Magnesium	mg/l	27.1	30.1	23.9	27.03333
Hardness	mg/l	422	457	379	419.3333
SBOD	mg/l	207	422	479	369.3333
pH	SU	6.7	6.98		6.84
Temperature	Deg F	66.2	60.2		63.2
Oil and Grease	mg/l	45	17		31
Flow	gpd	11,562	14,412	9,147	11707

CONFIDENTIAL

CONFIDENTIAL

SIEMENS
WATER TECHNOLOGIES

ROTATING BIOLOGICAL CONTACTOR DESIGN OUTLINE

Project: **Tioga Downs WWTF** Summer Revised 9-1-09
Engineer: LDG Group
Designer: LBR

2-Sep-09

INFLUENT PARAMETERS Following PATT & EQ

Flow, gpd	75,000	
Flow, mgd	0.075	
BOD5, lb/day	224	
BOD5, mg/L	358	
TSS, mg/L	103	
NH3-N, mg/L	71	
TKN, mg/L	86	
Min. Temp, F	55	
Max. Temp, F		
pH	7-8	Estimated
Alkalinity, mg/L as CaCO3		

EFFLUENT REQUIREMEN Following Settling

BOD5, mg/L	15
TSS, mg/L	15
NH3N, mg/L	35.0

DESIGN BASIS

Carbon Oxidation	
Primary treatment	Septic Tank
K factor	0.7
Septic factor, (SF = 1.5 for septic tank and 1.0 for others)	1.5
Estimated influent SBOD5, mg/L	263
Required SBOD5 in the effluent to meet the TBOD limit, mg/L	8
Required hydraulic loading rate @ 55 F, gpd/ft^2	0.91
Temperature correction factor (at minimum temperature)	1.000
Corrected hydraulic loading rate, gpd/ft^2	0.91
Required surface area for BOD reduction, ft^2	82,188
Nitrification (Yes/No)	*yes*
RBC influent NH3-N, mg/L (for septic tank, add hydrolized organic N)	71
Effluent NH3-N, mg/L	35.0
Ammonia loading @ 55 F, to reduce NH3-N to 30 mg/L, lb/day/1000 ft^2	0.30
Temperature correction factor	1.00
Surface area required to reduce NH3-N to 30 mg/L, ft^2	85485.00
Hydraulic loading @ 55 F to reduce NH3-N from 30 mg/L to effluent requirement, gpd/ft^2	-7.20
Corrected hydraulic loading rate, gpd/ft^2	-7.20
Surface Area required to reduce NH3-N from 30 mg/L to effluent requirement, gpd/ft^2	-10,417
Required surface area for nitrification, ft^2	75,068
Total Surface Area Required for BOD and Nitrification, ft^2	157,256

CONFIDENTIAL

SUGGESTED EQUIPMENT

Model(s) Selection: (2) RBC Model 425-LMH-3
RBC's are arranged in two parallel units.
Media envelope dimensions are 12 ft (3.6m) diameter by 25 ft long.

Stage	Type of Media	No. of Units	Unit Surface Area, ft^2	Total Surface Area, ft^2
1	Low Density	2	48,600	97,200
2	Medium	2	22,050	44,100
3	High	2	22,050	44,100
4				0
		Total surface area provided in all stages:		185,400

CRITICAL DESIGN CONSIDERATIONS

Soluble BOD loading on Stage 1 =	1.69	lb SBOD/1000 ft^2/day
Overall surface area margin =	17.90%	

POWER CONSUMPTION

	Installed HP	Operating HP
RBC Drive Motor	2 @ 5	2 @ 4

PRICING

	Description	No.	Unit Price	Unit	Total
Equipment	RBC Model 425-LMH-3	2	$160,000	Shaft	$320,000
					$0
					$0
					$0
					$0
			Estimated Equipment Cost		$320,000

Scope of Supply: Prices include freight, 6-O&M Manuals and 1-trips of 2-days total field service
The scope of supply includes media, media retainers, central shaft, bearings, bearing base plates, drive assemblies, mounting plates, guards, hydraulic load cells and shipping frame with all items based on our standard materials of construction.
The price includes standard mechanical warranty and service manuals.

Excluded From Scope:
Freight, taxes, duties, brokerage fees, export packing, crane or other lifting and handling equipment including associated rigging, installation, controls and control panels, piping, valves, gates, drains, weirs, baffles, pumps, blowers and air supply piping, walkways, ladders, platforms, handrailing, concrete, lubricants for bearings and reducers, bearing supports and process control instrumentation.

SIEMENS
WATER TECHNOLOGIES

ROTATING BIOLOGICAL CONTACTOR DESIGN OUTLINE

Project: **Tioga Downs WWTF** Winter Revised 9-1-09
Engineer: LDG Group
Designer: LBR

2-Sep-09

INFLUENT PARAMETERS Following PATT & EQ

Flow, gpd	75,000	
Flow, mgd	0.075	
BOD5, lb/day	224	
BOD5, mg/L	358	
TSS, mg/L	103	
NH3-N, mg/L	71	
TKN, mg/L	86	
Min. Temp, F	50	
Max. Temp, F		
pH	7-8	Estimated
Alkalinity, mg/L as CaCO3		

EFFLUENT REQUIREMEN Following Settling

BOD5, mg/L	20
TSS, mg/L	20
NH3N, mg/L	50.0

DESIGN BASIS

Carbon Oxidation	
Primary treatment	Septic Tank
K factor	0.7
Septic factor, (SF = 1.5 for septic tank and 1.0 for others)	1.5
Estimated influent SBOD5, mg/L	263
Required SBOD5 in the effluent to meet the TBOD limit, mg/L	10
Required hydraulic loading rate @ 55 F, gpd/ft^2	0.91
Temperature correction factor (at minimum temperature)	0.873
Corrected hydraulic loading rate, gpd/ft^2	0.80
Required surface area for BOD reduction, ft^2	94,116
Nitrification (Yes/No)	*yes*
RBC influent NH3-N, mg/L (for septic tank, add hydrolized organic N)	71
Effluent NH3-N, mg/L	50.0
Ammonia loading @ 55 F, to reduce NH3-N to 30 mg/L, lb/day/1000 ft^2	0.30
Temperature correction factor	0.78
Surface area required to reduce NH3-N to 30 mg/L, ft^2	110303.23
Hydraulic loading @ 55 F to reduce NH3-N from 30 mg/L to effluent requirement, gpd/ft^2	-1.80
Corrected hydraulic loading rate, gpd/ft^2	-1.40
Surface Area required to reduce NH3-N from 30 mg/L to effluent requirement, gpd/ft^2	-53,763
Required surface area for nitrification, ft^2	56,540
Total Surface Area Required for BOD and Nitrification, ft^2	150,656

CONFIDENTIAL

SUGGESTED EQUIPMENT

Model(s) Selection: (2) RBC Model 425-LMH-3
RBC's are arranged in two parallel units.
Media envelope dimensions are 12 ft (3.6m) diameter by 25 ft long.

Stage	Type of Media	No. of Units	Unit Surface Area, ft^2	Total Surface Area, ft^2
1	Low Density	2	48,600	97,200
2	Medium	2	22,050	44,100
3	High	2	22,050	44,100
4				0
		Total surface area provided in all stages:		185,400

CRITICAL DESIGN CONSIDERATIONS

Soluble BOD loading on Stage 1 =	1.69	lb SBOD/1000 ft^2/day
Overall surface area margin =	23.06%	

POWER CONSUMPTION

	Installed HP	Operating HP
RBC Drive Motor	2 @ 5	2 @ 4

PRICING

	Description	No.	Unit Price	Unit	Total
Equipment	RBC Model 425-LMH-3	2	$160,000	Shaft	$320,000
					$0
					$0
					$0
					$0
			Estimated Equipment Cost		$320,000

Scope of Supply: Prices include freight, 6-O&M Manuals and 1-trips of 2-days total field service
The scope of supply includes media, media retainers, central shaft, bearings, bearing base plates, drive assemblies, mounting plates, guards, hydraulic load cells and shipping frame with all items based on our standard materials of construction.
The price includes standard mechanical warranty and service manuals.

Excluded From Scope:
Freight, taxes, duties, brokerage fees, export packing, crane or other lifting and handling equipment including associated rigging, installation, controls and control panels, piping, valves, gates, drains, weirs, baffles, pumps, blowers and air supply piping, walkways, ladders, platforms, handrailing, concrete, lubricants for bearings and reducers, bearing supports and process control instrumentation.

CONFIDENTIAL

APPENDIX H

SIDE CAR AERATION

CONFIDENTIAL

Elmo Rietschle
A Gardner Denver Product

G-BH1

2BH1 600

Performance curve for Vacuum pump

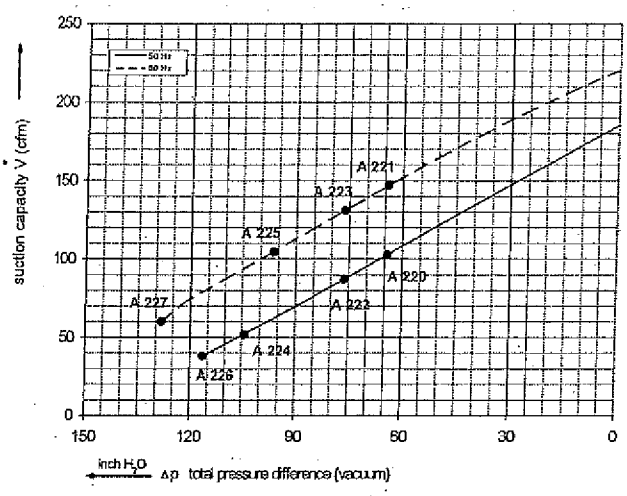

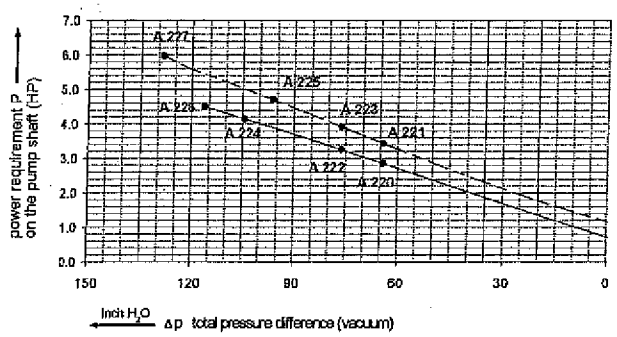

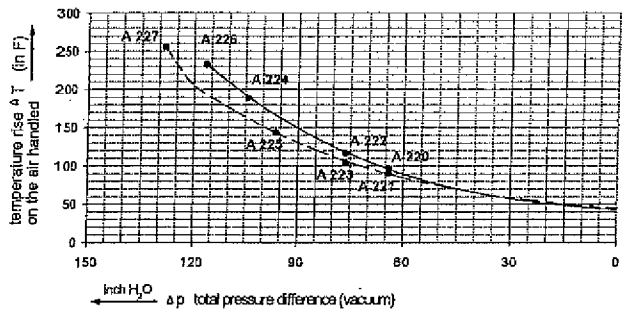

Performance curve for Compressor

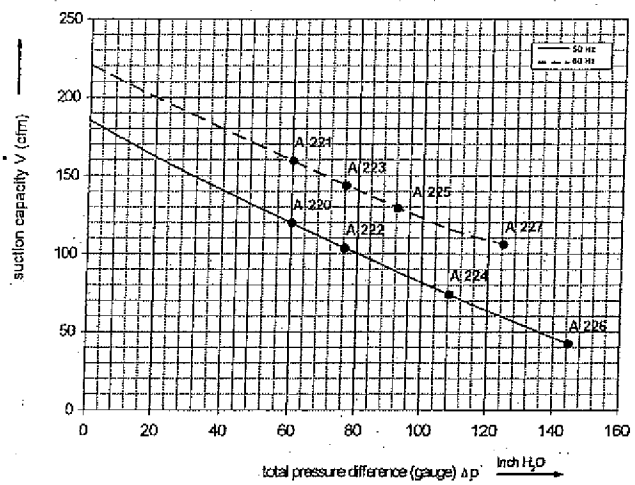

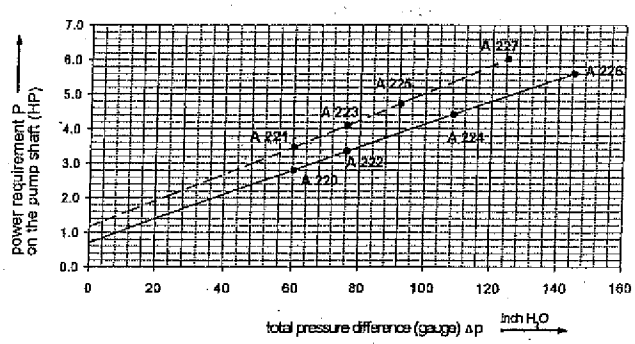

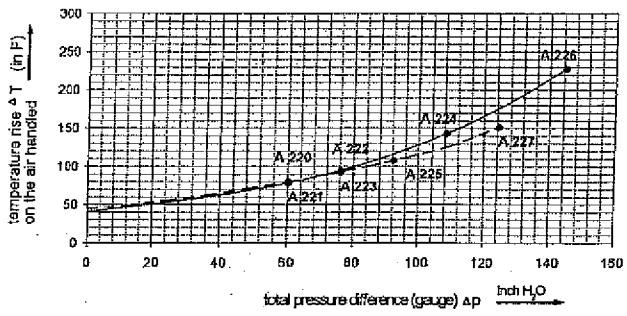

The performance curves are based on air at a temperature of 59 F and an atmospheric pressure of 401.53 inch H2O with a tolerance of +/- 10 %.
The total pressure differences are valid for suction and ambient temperatures up to 77 °F.
For other conditions please confer with us.

Each G-BH1 type can be applied both as vacuum pump and compressor in continuous operation over the total stated performance curve range. The motors are available as standard for the input voltage range of 50 and 60 Hz and for protection category IP 55 as well as approbated for UL and CSA.
Blowers with ATEX 94/9 EG are available, too.

CONFIDENTIAL

Selection and ordering data

Type 2BH1 600

Curve No.	Order No.	Frequency Hz	Rated power HP	Input voltage V		Input current A		Permissible total differential pressure [2] Vacuum inch H2O	Permissible total differential pressure [2] Compressor inch H2O	Sound pressure level [3] dB(A)	Weight ca. lbs
3~ 50/60 Hz IP55 isulation material class F 1)											
A 220	2BH1600-7AH06	50	2.14	200D ... 240D	345Y ... 415Y	8.5 D	4.9Y	-64	60	69	57
A 221	2BH1600-7AH06	60	2.75	220D ... 275D	380Y ... 480Y	8.8 D	5.1Y	-64	60	72	57
A 222	2BH1600-7AH16	50	2.95	200D ... 240D	345Y ... 415Y	9.7 D	5.6Y	-76	76	70	64
A 223	2BH1600-7AH16	60	3.42	220D ... 275D	380Y ... 480Y	10.3 D	6.0Y	-76	76	73	64
A 224	2BH1600-7AH26	50	4.02	200D ... 240D	345Y ... 415Y	12.5 D	7.2Y	-104	108	70	75
A 225	2BH1600-7AH26	60	4.62	220D ... 275D	380Y ... 480Y	12.6 D	7.3Y	-96	92	73	75
A 226	2BH1600-7AH36	50	5.36	200D ... 240D	345Y ... 415Y	15.6 D	9.0Y	-116	145	70	93
A 227	2BH1600-7AH36	60	6.17	220D ... 275D	380Y ... 480Y	15.6 D	9.0Y	-128	124	73	93
3~ 50/60 Hz IP55 isulation material class F 1)											
A 220	2BH1600-7AC05	50	2.0	500D		2.9 D		-64	60	69	57
A 221	2BH1600-7AC05	60	2.35	575D		2.95D		-64	60	72	57
A 222	2BH1600-7AC15	50	2.95	500D		4.5 D		-76	76	69	64
A 223	2BH1600-7AC15	60	3.42	575D		4.55D		-76	76	72	64
A 224	2BH1600-7AC25	50	4.02	500D		5.0 D		-104	108	69	75
A 225	2BH1600-7AC25	60	4.62	575D		5.1 D		-96	92	72	75
A 226	2BH1600-7AC35	50	5.36	500D		7.5 D		-116	145	69	93
A 227	2BH1600-7AC35	60	6.17	575D		7.6 D		-128	124	72	93

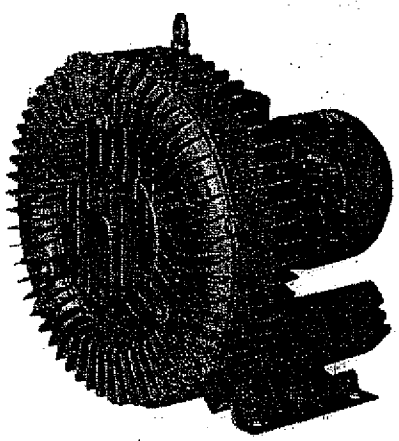

Other voltage ranges

50Hz	60Hz	2BH1600-7A ☐. ☐
3~		
185...225 V D / 320...390 V Y	200...240 V D / 345...415 V Y	H 1
200...240 V D / 345...415 V Y	220...275 V D / 380...480 V Y	H 6
345...415 V D	380...460 V D	H 7
500 V D	575 V D	C 5

Machines according to the ATEX norm 94/4 EG are available for the whole performance range.
Following types available: Category 3 G, 3/2 G, 3 D and 3/2 D.

Further voltage range on request; please quote in plain text.

All G-BH1 achieve the standards and norms of the low voltage directive 72/23/EWG, rotating electrotechnical motor EN 60034-1-34, electromag-netic compatibility (EMC) DIN EN 61000-3/-6/-4.

1) For standard UL for ELECTRIC FANS UL 507 and CSA 22.2 No. 13 for Fans and Ventilators (Certificate Number E225239).

2) Relief-valve are available for limiting differential pressure.

3) Measuring-surface sound-pressure level acc. to DIN EN 21680, measured at a distance of 3.28 ft. The pump is throttled to an average suction pressure, a hose is connected to the discharge side (vacuum pump) / suction side (compressor), but is not fitted with relief valves.

The motors are designed according to the DIN EN 60 034 / DIN IEC 34-1 and temperature class F.

For the three phase machines the tolerances are +/- 10 % for fixed voltage and +/- 5 % for voltage range.

For all three phase machines which designed according to the UL and CSA norm (UL 507 and CSA 22.2 No. 100) the maximum allowed voltage tolerances are - 10 % resp. + 6 %

The frequency tolerance is maximum +/- 2 %.

Changes in particular the quoted performance curve, datas and weights without prior notice. The figures are without obligations.

Gardner Denver

Elmo Rietschle is a brand of the Gardner Denver Blower Division

info@de.gardnerdenver.com
www.gd-elmorietschle.com

Gardner Denver Schopfheim GmbH

Roggenbachstr. 58
79650 Schopfheim · Germany
Tel. +49 7622 392-0
Fax +49 7622 392-300

Gardner Denver Deutschland GmbH

Industriestr. 26
97616 Bad Neustadt · Germany
Tel. +49 9771 6888-0
Fax +49 9771 6888-4000

CONFIDENTIAL

Elmo Rietschle
A Gardner Denver Product

G-BH7

2BH7 510

Performance curve for Vacuum pump

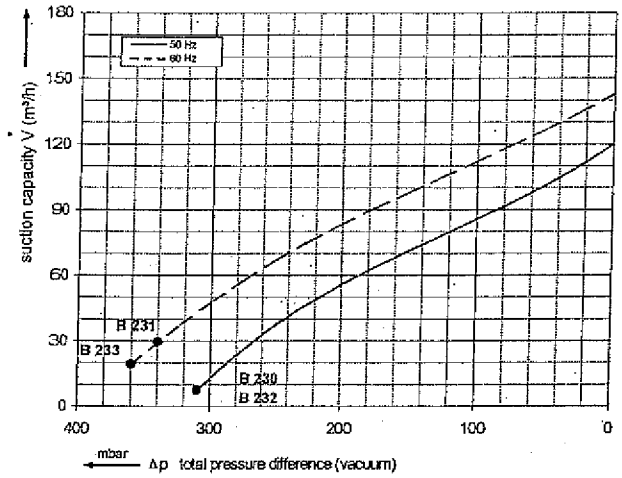

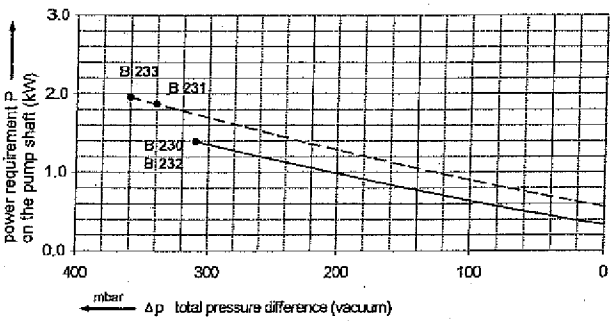

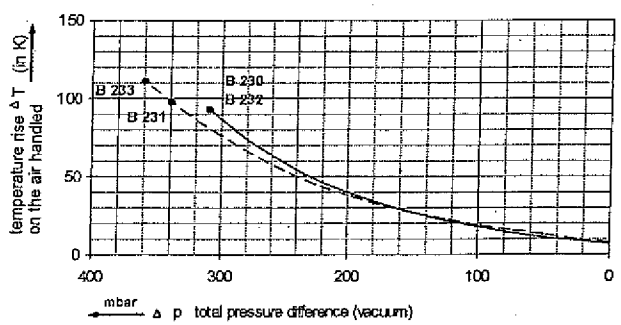

The performance curves are based on air at a temperature of 15 °C and an atmospheric pressure of 1013 mbar with a tolerance of +/- 10 %.
The total pressure differences are valid for suction and ambient temperatures up to 25 °C.
For other conditions please confer with us.

Performance curve for Compressor

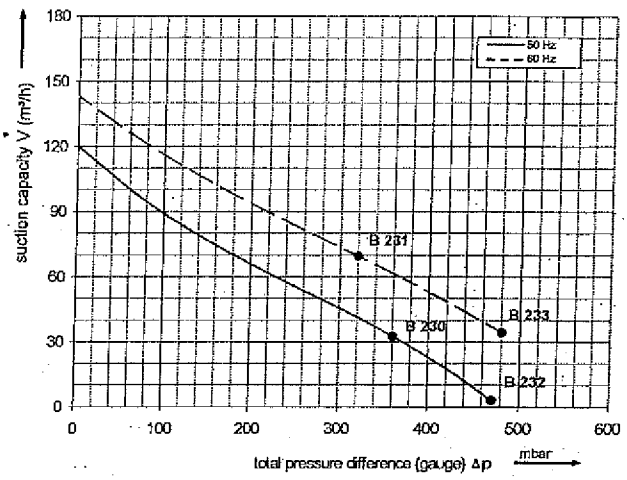

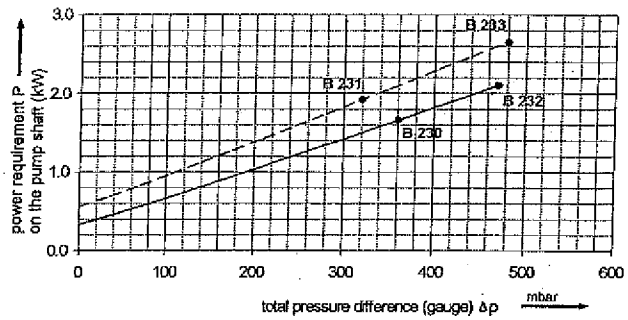

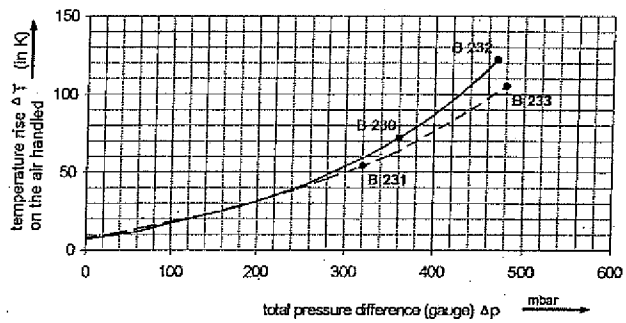

Each G-BH7 type can be applied both as vacuum pump and compressor in continuous operation over the total stated performance curve range. The motors are available as standard for the input voltage range of 50 and 60 Hz and for protection category IP 55 as well as approbated for UL and CSA. Blowers with ATEX 94/9 EG are available, too.

CONFIDENTIAL

Selection and ordering data

Type 2BH7 510

Curve No.	Order No.	Frequency	Rated power	Input voltage		Input current		Permissible total differential pressure [2]		Sound pressure level [3]	Weight ca.
								Vacuum	Compressor		
		Hz	kW	V		A		mbar	mbar	dB(A)	kg
3~ 50/60 Hz IP55 isulation material class F 1)											
B 230	2BH7510-0AH16-8	50	1.5	200D ... 240D	345Y ... 415Y	7.5D	4.3Y	-310	360	64	26
B 231	2BH7510-0AH16-8	60	1.75	220D ... 275D	380Y ... 480Y	7.6D	4.4Y	-340	320	68	26
B 232	2BH7510-0AH26-8	50	2.2	200D ... 240D	345Y ... 415Y	11.4D	6.6Y	-310	470	64	29
B 233	2BH7510-0AH26-8	60	2.55	220D ... 275D	380Y ... 480Y	11.2D	6.5Y	-360	480	68	29

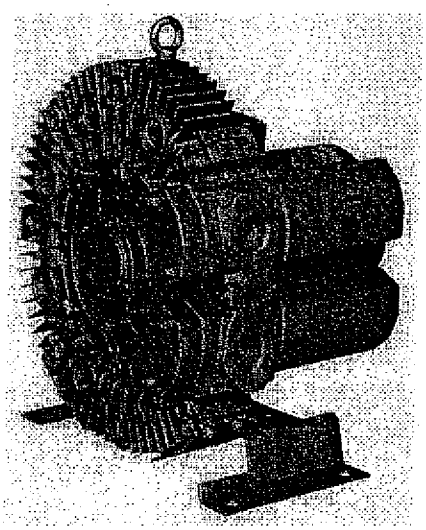

Other voltage ranges

50Hz	60Hz	2BH7510-0A ☐. ☐ ↑ ↑
3~		
185...225 V D / 320...390 V Y	200...240 V D / 345...415 V Y	H 1
200...240 V D / 345...415 V Y	220...275 V D / 380...480 V Y	H 6
345...415 V D	380...480 V D	H 7
500 V D	575 V D	C 5

Machines according to the ATEX norm 94/4 EG are available for the whole performance range.
Following types available: Category 3 G, 3/2 G, 3 D and 3/2 D.

Further voltage range on request; please quote in plain text.

All G-BH7 achieve the standards and norms of the low voltage directive 72/23/EWG, rotating electrotechnical motor EN 60034-1-34, electromagnetic compatibility (EMC) DIN EN 61000-3/-6/-4.

1) For standard UL for ELECTRIC FANS UL 507 and CSA 22.2 No. 13 for Fans and Ventilators (Certificate Number E225239).

2) Relief-valve are available for limiting differential pressure.

3) Measuring-surface sound-pressure level acc. to DIN EN 21680, measured at a distance of 1 m. The pump is throttled to an average suction pressure, a hose is connected to the discharge side (vacuum pump) / suction side (compressor), but is not fitted with relief valves.

The motors are designed according to the DIN EN 60 034 / DIN IEC 34-1 and temperature class F.

For the three phase machines the tolerances are +/- 10 % for fixed voltage and +/- 5 % for voltage range.

The frequency tolerance is maximum +/- 2 %.

Changes in particular the quoted performance curve, datas and weights without prior notice. The figures are without obligations.

Gardner Denver

Elmo Rietschle is a brand of the Gardner Denver Blower Division

Info@de.gardnerdenver.com
www.gd-elmorietschle.com

Gardner Denver Schopfheim GmbH

Roggenbachstr. 58
79650 Schopfheim · Germany
Tel. +49 7622 392-0
Fax +49 7622 392-300

Gardner Denver Deutschland GmbH

Industriestr. 26
97616 Bad Neustadt · Germany
Tel. +49 9771 6888-0
Fax +49 9771 6888-4000

CONFIDENTIAL

CORR-GARD™

NATIONAL PIPE & PLASTICS, INC.

PVC SCHEDULE 80

INDUSTRIAL PVC PIPE SYSTEM

National Pipe & Plastics, Inc. CORR-GARD™ PVC Schedule 80 IPS pressure pipe is manufactured in accordance with the specifications setforth in ASTM Standard D-1785 and is listed with NSF for use in potable water applications, having met standard 14 & 61 requirements. Dark gray in color our PVC Schedule 80 is manufactured from a rigid polyvinyl chloride compound with a Cell Classification of 12454 as defined in ASTM Standard D-1784.

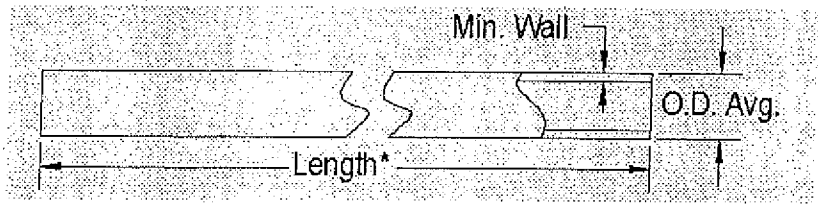

PIPE DIMENSIONS

Nonminal Size (inches)	Avg. O.D.	Minimum Wall Thickness Schedule 80	Pressure Rating @ 73° F (PSI) Schedule 80	Feet Per Pallet
1/2	.840	.147	850	8100
3/4	1.050	.154	690	4560
1	1.315	.179	630	3000
1-1/4	1.660	.191	520	3600
1-1/2	1.900	.200	470	3300
2	2.375	.218	400	1980
2-1/2	2.875	.276	420	1980
3	3.500	.300	370	920
4	4.500	.337	320	520
6	6.625	.432	280	440
8	8.625	.500	250	280
10	10750	.593	230	240
12	12.750	.687	230	60

CORR-GARD™ Industrial PVC is a corrosion resistant pressure-rated pipe available in sizes 1/2-12" for use in applications where conveyed fluid temperatures do not exceed 140° F.
Typical applications include: Chemical processing, Plating operations, and potable water applications. high purity or wastewater treatment, as well as other industrial applications.

* Standard lengths are 20 feet, other lengths available upon request.

10/07

CONFIDENTIAL

THE clic SYSTEM

WHAT IT IS

The Automatic Locking & Corrosion Resistant Pipe/Tube Support & Hanger

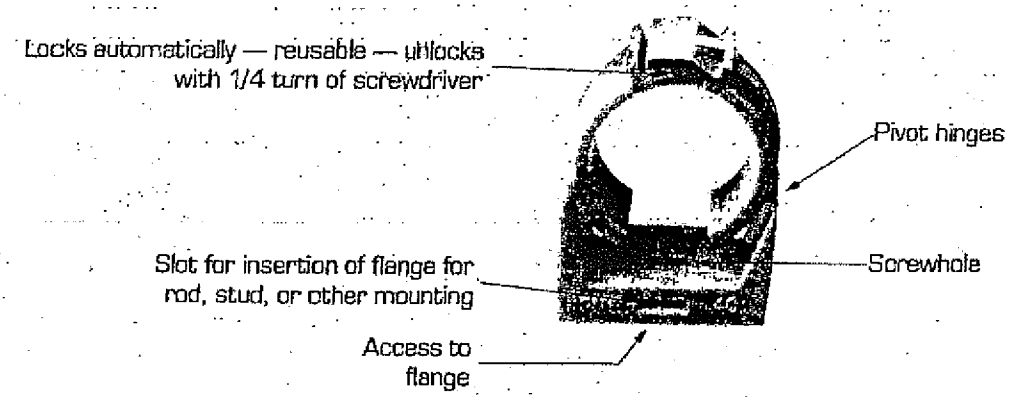

Single Oval center mounting hole permits lateral and angular mounting adjustment.
Made from Nylon 12, Grilamid® — The high performance polyamid
Temperatures: −40°F to +180°F continuously, and to +225°F intermittently with installation temperatures to −5°F.

HOW IT WORKS

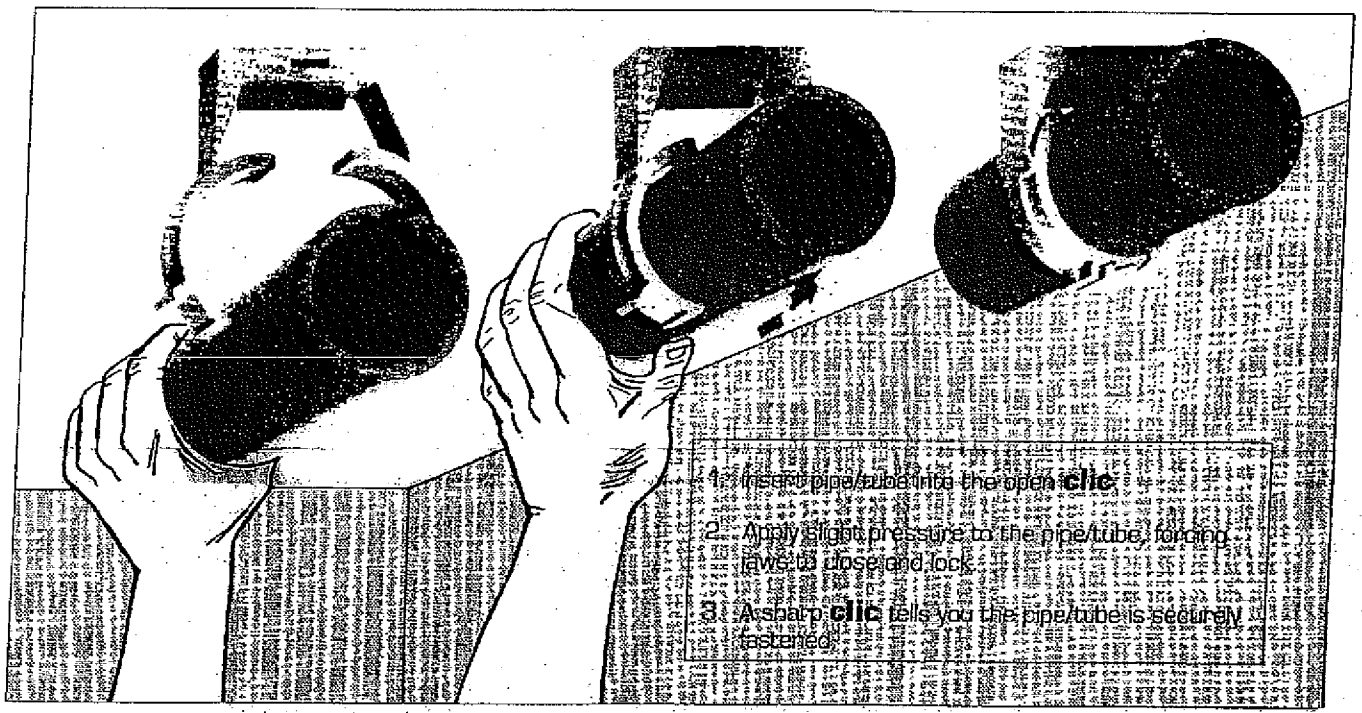

© EMSER Industries,
P.O. Box 1717, Sumter, S.C. 29151-1717

CONFIDENTIAL

QWIK TEES AND ELLS

for in-wall or other limited space connections.

Qwik Tees And Elbows

let you connect all common household drain, waste and vent pipes quickly and easily without using special tools or fittings. Because they're exceptionally flexible and extra long, they're the ideal replacement for fittings cut out at the joint during alteration or repair. The connectors are easily installed by tightening the stainless steel clamps. Made from flexible PVC, Qwik-Tees and Qwik-Elbows come in four sizes (1-1/2", 2", 3" and 4") and fit all common household pipes including cast iron, steel, plastic, copper and lead. Reducing sizes are made with separately supplied bushings.

Qwik Ells

Qwik Tees

Installation Instructions

1. To remove existing elbow or tee, cut pipe at joints as shown.
2. Slip pipe into fitting socket.
3. Securely tighten stainless steel bands. (60" lbs. torque.)
4. Support pipe on all sides of connection to keep weight off fitting.
5. Test for leaks before concealing. Note: Not recommended for underground connections. For drain, waste, and vent use only. In-wall pipe should be supported. Do not use in pressure applications.

Tees and elbows adapt to other pipe sizes with Qwik Bushings.

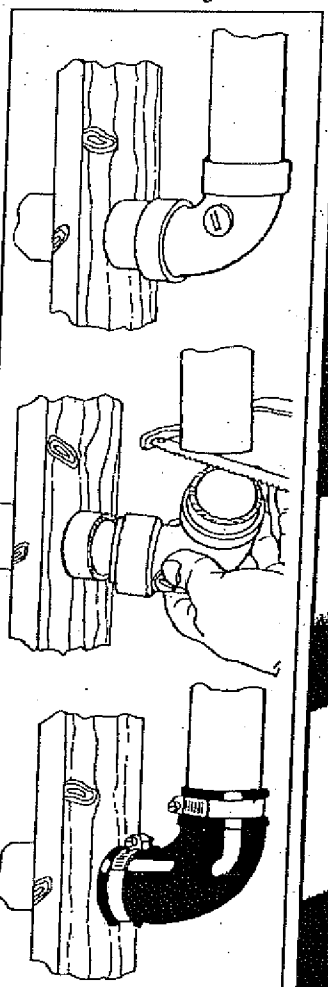

To Repair Or Replace A Plastic Ell Or Tee

To repair this installed rigid elbow it is first necessary to cut out the elbow. After cutting, the portion of pipe that was welded into each socket is lost, and now a regular schedule 40 fitting can no longer be used in replacement unless the pipes are extended back to normal position. Also, the pipes are usually in a fixed position, making it difficult or impossible to get the necessary room required to solvent weld a new joint. The Qwik Elbows and Qwik Tees, however, are engineered with extra length and flexibility to compensate for the shortened pipes.

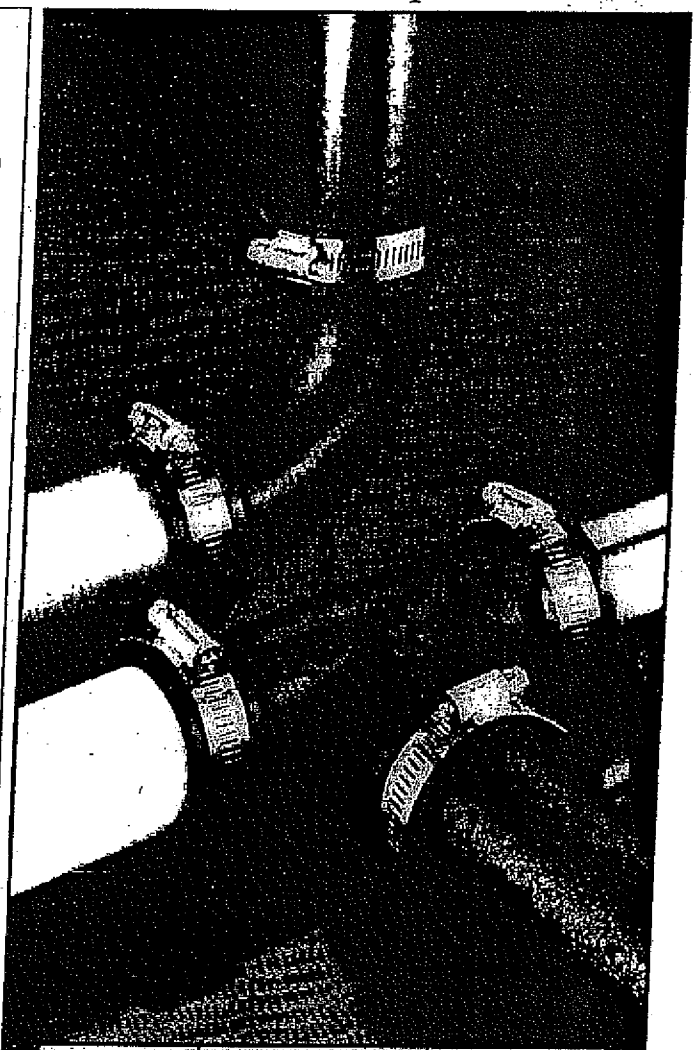

Part No.	Size	Product
QT-150	1-1/2" x 1-1/2" x 1-1/2"	Tees
QT-200	2" x 2"x 2"	
QT-300	3" x 3" x 3"	
QT-400	4" x 4" x 4"	
QL-150	1-1/2" x 1-1/2"	Elbows
QL-200	2" x 2"	
QL-300	3" x 3"	
QL-400	4" x 4"	
QB-215	2" x 1-1/2"	Bushings
QB-32	3" x 2"	
QB-43	4" x 3"	

CONFIDENTIAL

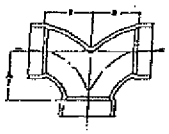

PART NO. 327
DOUBLE 1/4 BEND
ALL HUB

SIZE	A	B	C	D
1½	1¾	1¾		
2	2⁵/₁₆	2⁵/₁₆		
3	3¹/₁₆	3¹/₁₆		
2x1½x1½	1¹⁵/₁₆	2⁵/₁₆		

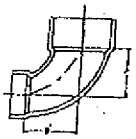

PART NO. 328
CLOSET BEND, REDUCING
HUB X HUB

SIZE	A	B	C	D
3x4	3	3⅞		

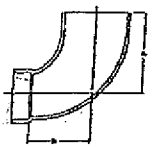

PART NO. 329
CLOSET BEND, REDUCING
HUB X SPIGOT

SIZE	A	B	C	D
3x4	5	3⅝		

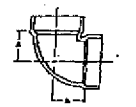

PART NO. 331
VENT ELL
(90° Short Turn Ell)
HUB X HUB

SIZE	A	B	C	D
1½	1¹⁵/₁₆			
2	1½			
3	1⅞			

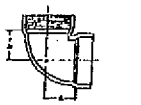

PART NO. 332
VENT ELL
(90° Short Turn Ell)
FPT X HUB

SIZE	A	B	C	D
1½	1¹⁵/₁₆			
2	1½			

AVAILABLE IN PVC ONLY

CHARLOTTE
PIPE AND FOUNDRY COMPANY

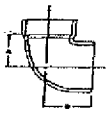

PART NO. 333
VENT ELL, STREET
(90° Short Turn Street Ell)
HUB X SPIGOT

SIZE	A	B	C	D
1½	1¹⁵/₁₆	2¼		
2	1½	2⅝		
3	1⅞	3½		

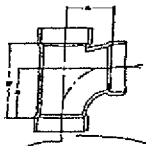

PART NO. 400
SANITARY TEE
ALL HUB

SIZE	A	B	C	D
1½	1¾	2¾		
2	2⁵/₁₆	3¹¹/₁₆		
3	3¹/₁₆	4⅞		
4	3⅝	6⅛		
5	5	8½		

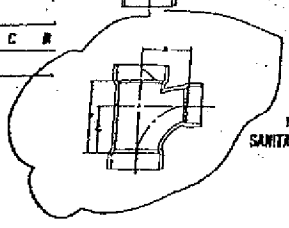

PART NO. 401
SANITARY TEE, REDUCING
ALL HUB

SIZE	A	B	C	D
2x1½x1½	2¹/₁₆	3½	1¹⁵/₁₆	
2x1½x2	2¹/₁₆	3¹¹/₁₆	2⁵/₁₆	
2x2x1½	2¹/₁₆	3½	1¹⁵/₁₆	
3x3x1½	2¹⁵/₁₆	2¹¹/₁₆	1¾	
3x3x2	2⅝	3¹/₁₆	2½	
4x4x1½	3¹/₁₆	3¹/₁₆	2¹/₁₆	
4x4x2	3¹/₁₆	3¹/₁₆	2¹/₁₆	
4x4x3	3¹/₁₆	4⅛	3	
6x6x4	4⅞	6⁷/₁₆	3¹¹/₃₂	

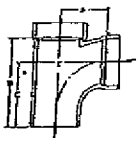

PART NO. 403
SANITARY TEE, STREET
SPIGOT X HUB X HUB

SIZE	A	B	C	D
1½	1¾	3½	2½	
2	2⁵/₁₆	4⁹/₁₆	3¹/₁₆	
3	3¹/₁₆	6⅝	4⁹/₁₆	
4	3½	7⅞	5½	

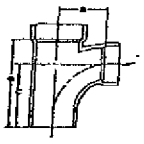

PART NO. 404
SANITARY TEE, STREET REDUCING
SPIGOT X HUB X HUB

SIZE	A	B	C	D
2x2x1½	2⁵/₁₆	4	2¹⁵/₁₆	
3x3x1½	2¹⁵/₁₆	4⁹/₁₆	3¼	
3x3x2	2½	4¹³/₁₆	3½	
4x4x2	3¹/₁₆	4¹⁵/₁₆	3¹⁵/₁₆	

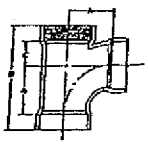

PART NO. 405
SANITARY TEE
HUB X FPT X HUB

SIZE	A	B	C	D
1½	1¾	4¼	1	
2	2⁵/₁₆	5¹/₁₆	1½	
3	3¹/₁₆	7½	1¹⁵/₁₆	

AVAILABLE IN PVC ONLY

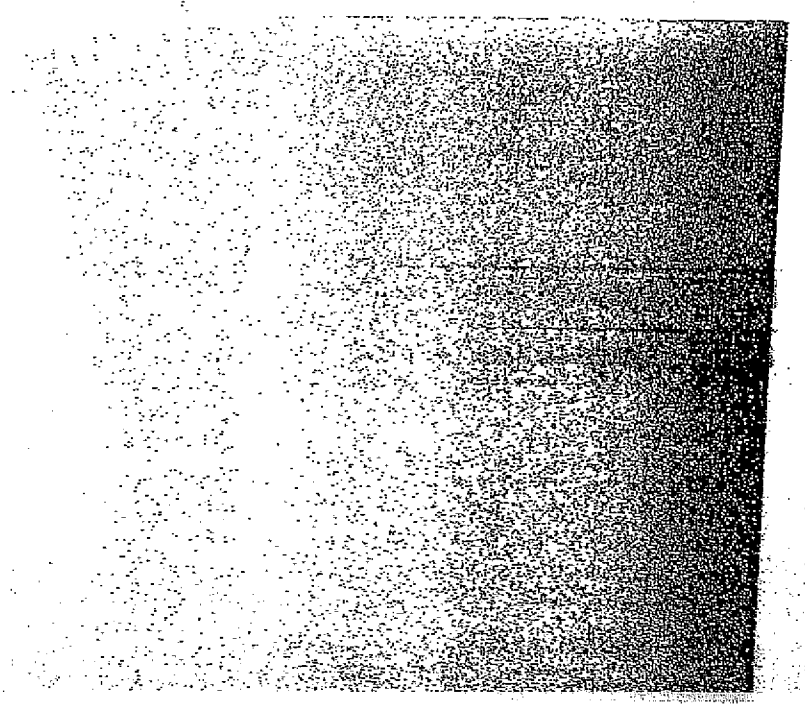

CONFIDENTIAL

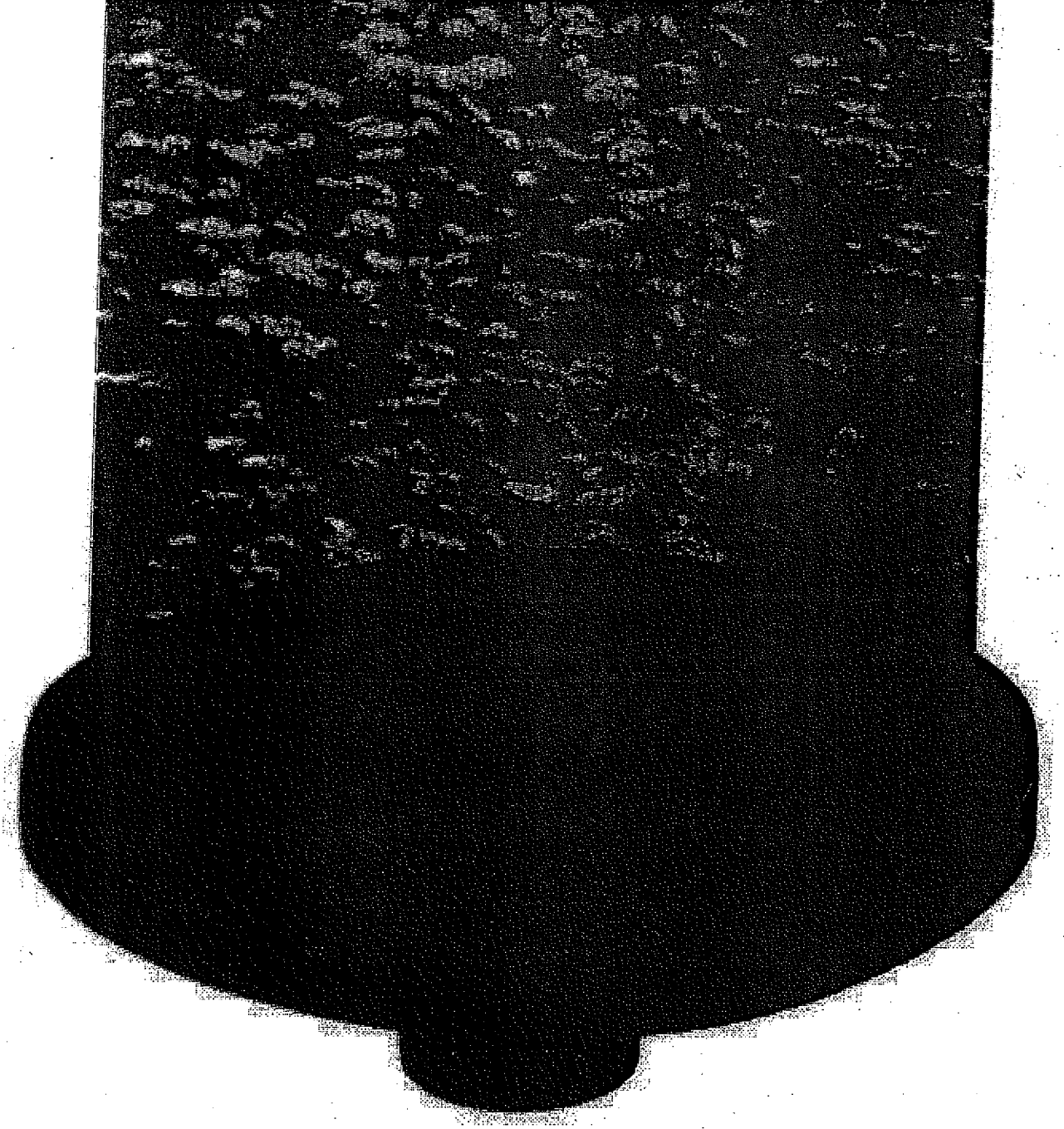

FlexCap™ Diffuser

The First Diffuser Engineered For Extended Life
Without Plugging, Without Blow-Off,
Without Maintenance. We Guarantee It!

CONFIDENTIAL

Design Breakthrough Makes Available The Most Reliable Coarse Bubble Diffuser Ever Built

At Mooers Products, our experience with coarse bubble diffusers goes back to the 1970's ... we've seen hundreds of installations with more diffusers than we can count. And repeatedly, we've seen operators experiencing plugging and blow-off problems.

Mooers Offers A Better Engineered Diffuser, Designed For Longevity! The Proof Is In Our Performance.

We haven't heard of any performance problems since the Flexcap™ Diffuser was introduced. Meanwhile, ordinary diaphragm diffusers still have the same old problems: plugging, brittleness, periodic maintenance and eventual blow-off. The Flexcap Diffuser was engineered from the cap down to the threads to eliminate those problems. The result: the first true extended-life diffuser available.

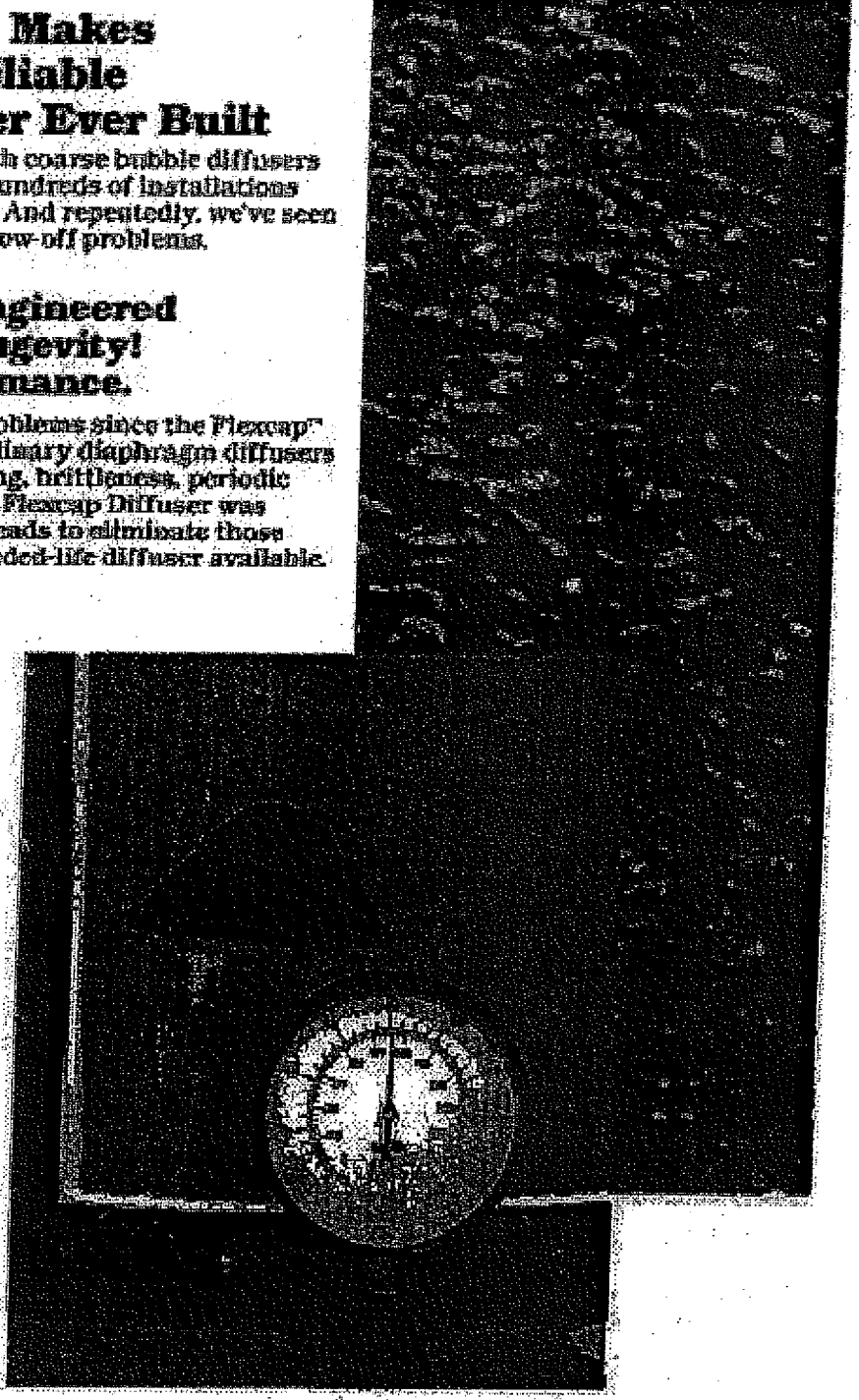

And It Works!

It works twice as long as any other diaphragm diffuser available today. It will not plug. It will not blow-off. It even resists brittleness. And it's virtually maintenance free.

This may seem hard to believe after all the promises and claims you have heard about diffusers. But we have so much confidence in the Flexcap Diffuser that we guarantee it.

80 PSI And It Didn't Blow

Sudden bursts of extreme air pressure, debris or brittleness over time cause ordinary diffusers to blow their caps. The Flexcap Diffuser won't blow its cap, not even when the pressure reaches 80 PSI or more. Debris can't plug it and even calcium carbonate build up is eliminated. (Test results are available so you can see for yourself.)

If brittleness does set in, this cap is designed to hug the base even tighter. No other diffuser can make these claims. We know. We've used and tested them all.

Check Valve Action Keeps Debris Out Of System

The smooth top on the base keeps debris from clinging and settling. This feature along with the greater flexibility of the cap provides a tight leak proof seating surface. When the air supply stops, the larger diameter of the base and cap allows added pressure from the liquid above to close the cap more securely to the base. This combined check valve action minimizes the chance of any debris or water entering the diffuser.

CONFIDENTIAL

It Works Like A Diffuser

The Flexcap Diffuser can replace any diaphragm diffuser you are using. It meets all the requirements for aeration in municipal, commercial, residential and recreational property package wastewater treatment systems. And it works effectively in existing or new installations.

The Flexcap Diffuser uses a uniquely engineered cap and base that is deceptively simple in appearance, but it has been designed to work where other diffusers have failed.

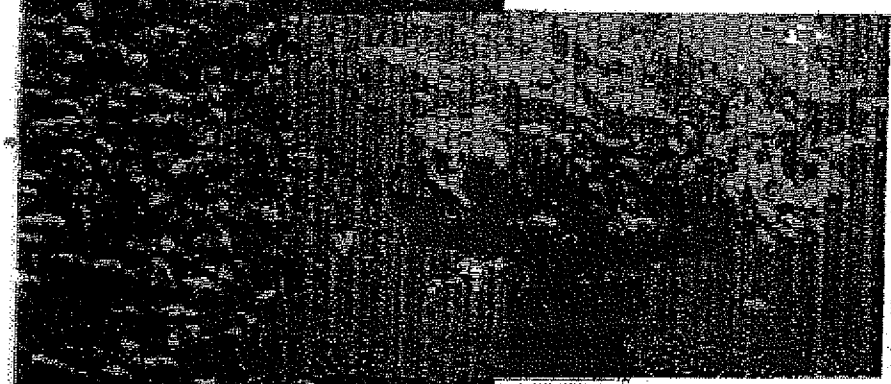

Bottom distribution ring design with air holes spaced on outside of the base form a uniform bubble distribution over the entire diameter of diffuser providing excellent oxygen transfer. It works whether the installation is flat or at an angle as severe as 15 degrees.

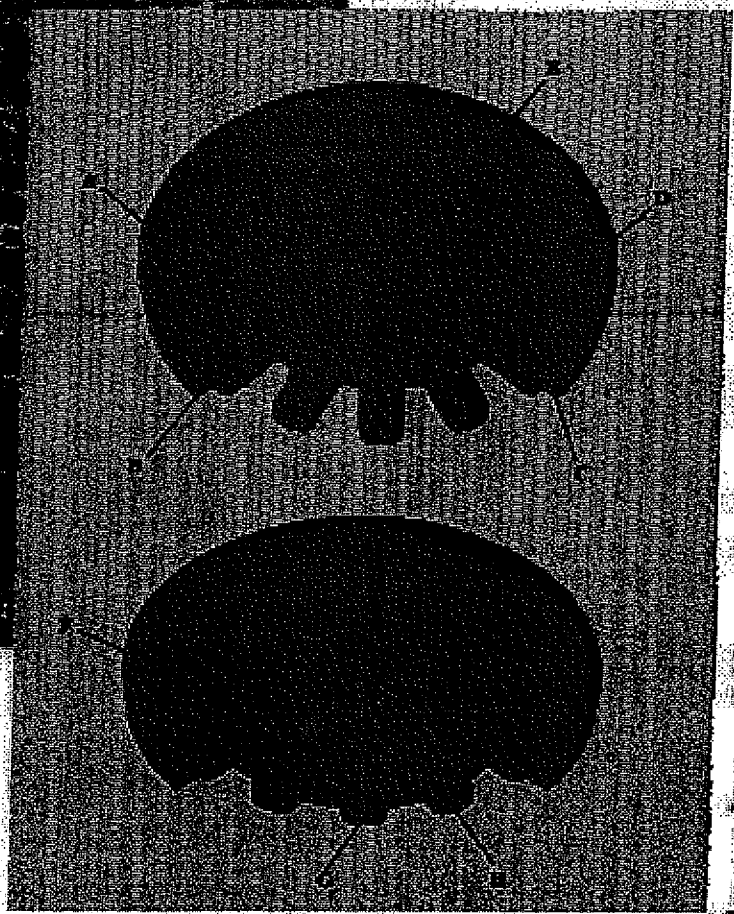

A. Air holes on underside of diffuser combine with self-wiping action to keep diffuser from plugging.
B. Pockets reinforce locking lips to prevent walk-off.
C. Pockets actually agitate back and forth during aeration, to wipe away debris and prevent plugging.
D. Cap placement on base allows movement . . . cap can't be forced off even during extreme contraction.
E. Uniform thread design makes replacement easy in existing or new installations.
F. Cap material specially formulated to retain flexibility longer.
G. Multiple fingers are extra long and uniform to accept direct stress. This holds cap on even under extreme pressure, shifting and vibration.
H. Smooth top keeps debris from clinging and settling on base. Provides clean, open seating surface when air is shut off.

On The Inside No Other Diffuser Can Match It

On the outside the Flexcap looks like every other diaphragm diffuser. But inside, is what makes the difference. Take a closer look. It's enough to change your mind about diaphragm diffusers.

What It Doesn't Do Is What Every Operator Was

No Plugging

- Underside orifice design prevents debris from settling inside the diffuser.
- Controlled velocity through air holes provides a positive flushing action.
- Dissimilar materials forming the orifice cause a flexing at the air holes that "wipes" the surface free of debris.

No Blow-Off

- Multiple fingers provide a blow-proof locking action by transferring stress to the outer tips. This action forces the cap tightly onto the diffuser.
- Pockets used to reinforce cap also reinforce locking lip to minimize movement and prevent cap from walking off disc plate.

Minimizes Effect of Brittleness

- Unique cap and base design actually locks the cap tighter onto the base if brittleness does occur.
- Even before it hits the water, the cap is more flexible than other diffusers through the use of lower durometer cap material.

No Maintenance

Because the Flexcap Diffuser doesn't plug, won't blow-off and isn't as susceptible to failure due to brittleness, it is virtually maintenance free. No other diffuser can match this performance.

Years of experience have proven how reliable the Flexcap Diffuser is . . . You can find out how to solve your problems with a phone call. Check the facts on the back cover; then call for

CONFIDENTIAL

Figure It Out For Yourself... The Flexcap™ Diffuser Can Save You Labor, Time and Money

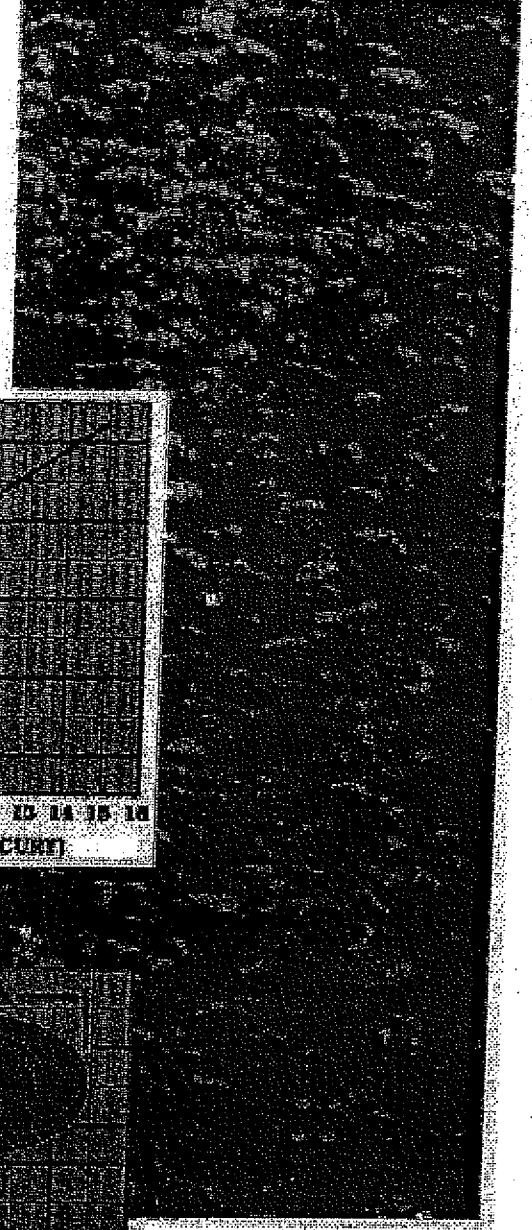

Head Loss Characteristics

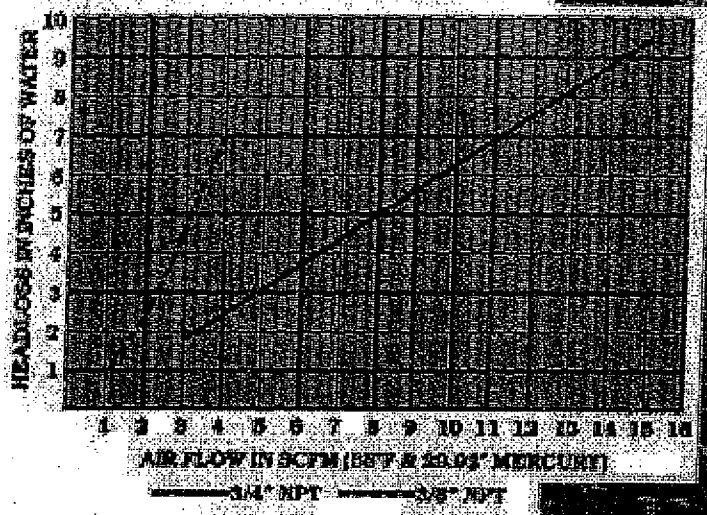

Dimensions And Specifications

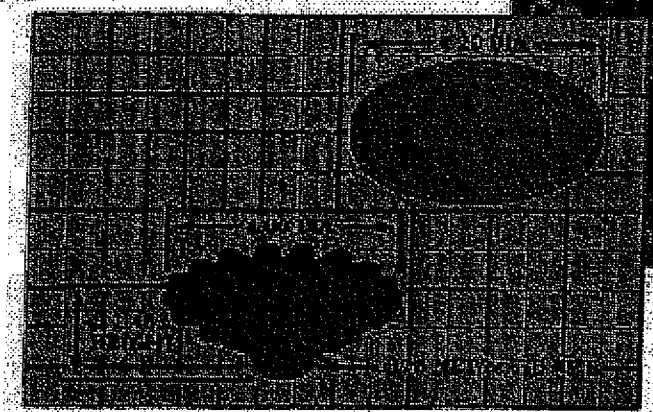

SPECIFICATIONS
EPDM CAP
POLYPROPYLENE BASE
TOTAL HEIGHT 1.625 IN.
Other Technical Data available upon request.

5554 North Navajo Avenue • Milwaukee, WI 53217 U.S.A. • 414/964-3002 Fax: 964-3510

Bulletin Number: MPI 100-3M/290
Printed in U.S.A.

Copyright 1990, Modern Products, Inc.

CONFIDENTIAL

APPENDIX I

CLARIFIER

Tioga Downs WWTP
Final Clarifier Sizing

Calculated by CBB 3/26/2008
Checked by GMC 9/17/2008

There are no standards for clarifier design in the DEC's "Design Standards for Wastewater Treatment Works", 1988 document
Final clarifier design will be based on standards from the 10 States Standards document, 2004
Design Requirements:
Final clarifier is placed after the RBC process, the RBC process also utilizes extra aeration via diffusers at the bottom of the RBC contactor tanks, thus some of the standards required will look at this as an conventional activated sludge process.

Side Water Depth (ft)	10	based on Section 72.1, clarifiers following fixed film reactors shall have a side water depth of at least 7'
Surface Overflow Rate (gpd/ft^2)	1,200	based on Section 72.231 and at peak hourly flow
Peak Solids Loading, (lb per day/ft^2)	50	based on Section 72.232 for conventional activated sludge process, solids loading not critical for an RBC with no extra aeration
Maximum Mixed Liquor Suspended Solids (mg/L)	1,000	usually between 1000 mg/L and 4000 mg/L for conventional activated sludge process
Weir Loading Rate (gpd/LF)	20,000	based on Section 72.43 at PHF for plants with an ADF less than or equal to 1.0 MGD
Minimum Freeboard (in)	12	based on Section72.7
ADF -Average Day Flow (gpd)	[redacted]	Three treatment trains combined
Maximum Day Peak Factor	2.5	
MDF - Maximum Day Flow (gpd)	[redacted]	Three treatment trains combined
Peak Hourly Factor (gpd)	4	
PHF - Peak Hourly Flow Rate (gpd)	[redacted]	Three treatment trains combined

Minimum Required Surface Area (ft^2)	250	Total
	125	per Clarifier
Minimum Diameter (ft) - hydraulic loading	17.8	Total
	8.9	per Clarifier
Minimum Diameter (ft) - solids loading rate	8.0	Total
	4.0	per Clarifier

Clarifier to be based on hydraulic loading, not solids loading

Desired Clarifier Diameter (ft) 14.0 each Clarifier

Hydraulic Loading	gpd/ft2	
ADF -Average Day Flow (gpd)	244	per Clarifier
MDF - Maximum Day Flow (gpd)	609	per Clarifier
PHF - Peak Hourly Flow Rate (gpd)	975	Under the max. allowable rate of 1,200 gpd/ft2 per Clarifier

Desired Clarifier Sidewall Depth (ft) 10.0 per Clarifier

Hydraulic Detention Time	hours	
ADF -Average Day Flow (gpd)	7.4	Ok, per CE Reference Manual, 9th edition, min. detention time for plants with ADF less than 0.5 MGD should be 3.0 hours at ADF per Clarifier
MDF - Maximum Day Flow (gpd)	2.9	per Clarifier
PHF - Peak Hourly Flow Rate (gpd)	1.8	per Clarifier

Weir Loading Rate		
Weir Offset from Clarifier Wall (ft)	0.5	
Diameter of Weir (ft)	13.0	per Clarifier
Length of Weir (LF)	40.8	per Clarifier

Weir Loading Rate (gpd/LF) at PHF 3,673 Ok, does not exceed the required weir loading rate of 20,000 gpd/LF at PHF per Clarifier

CONFIDENTIAL

APPENDIX J

ULTRAVIOLET/ PARSHALL FLUME

CONFIDENTIAL

Tioga Downs WWTP
Ultraviolet Disinfection Design

Calculated by	LTZ	8/11/2008
Checked by	GMC	9/17/2008
Revised by	GMC	8/27/2009

Based on NYSDEC - Design Standards for Waterwater Treatment Works (1988)

Turbidity should be less than 10 JTU and color should be less than 15 units.
Pretreatment by intermittent sand filtration is recommended.
A minimum dose of 16000 kw- sec/m^3 is recommended.
The maximum depth of penetration should be no greater than 2-inches.
Lamps should be chemically cleaned 3 to 4 times a year.

Based on 10 States Standards document, 2004

At least two banks in series shall be provided in each channel.
Alarm system required for lamp failure and low UV intensity.
High effluent required.

CONFIDENTIAL

Tioga Downs WWTP Calculated by LTZ 9/2/2009
Parshall Flume Design Criteria Checked by GMC 9/3/2009

Peak Flow =	187,500 gpd	=	130 gpm
Average Flow =	75,000 gpd	=	52 gpm
Mim. Flow =	7,000 gpd	=	5 gpm

Location 15' downstream of Manhole

Parshall Flume Sizing

Discharge through a Parshall flume can occur for two conditions of flow: free flows and submerged flows.

Under free flow conditions a phenomenon known as the hydraulic jump or "standing wave" occurs downstream from the flume. For free flow, only the head Ha (see Figure 2) at the upstream gauge location is needed to determine the discharge from a standard table.

Submerged flow occurs when the water surface downstream from the flume is high enough to reduce the discharge. In order to determine the discharge, submerged flow requires the measurement of both an upstream depth, Ha, and a depth in the throat, Hb (see Figure 2), and submerged discharge tables will have to be used to calculate the discharge.

In general, selecting and installing a Parshall flume so that conditions of free flow exist is desired since submerged conditions greatly complicate the determination of flow rate.

When designing the flume, several factors have been considered:

1. Selecting flume size

   The final selection of a 2" flume has been made based on the original channel/pipe dimension, 8", and the expected flow range, 7,000-187,500 gpd (5-130 gpm).

   Minimum and maximum recommended flow rates for free flow through 2" Parshall Flume are:

   Min. 4.94 gpm with Min. 0.07 feet head and Max. 137 gpm with Max. 0.6 feet head
2. Assure accurate discharge measurement

   The approaching flow should enter the converging section reasonably well distributed across the entrance width, and flowlines should be essentially parallel to the flume centerline.
3. Installation of Parshall Flume

   Particularly for small size (1"-3") flumes, careful leveling is necessary in both longitudinal and transverse directions if standard discharge tables are to be used. The flume should be set on a solid foundation to prevent settlement or heaving. Collars should be attached to the upstream and/or downstream flanges of the flume, and should entend well out into the channel banks and invert to prevent flow from bypassing the structure and eroding the foundation.

Reference: ISCO Open Channel Flow measurement Handbook, Fifth Edition
USBR Water measurement Manual - Chapter 8 - Flumes, Section 10. Parshall Flumes

Recommendation: 2" Parshall Flume

CONFIDENTIAL

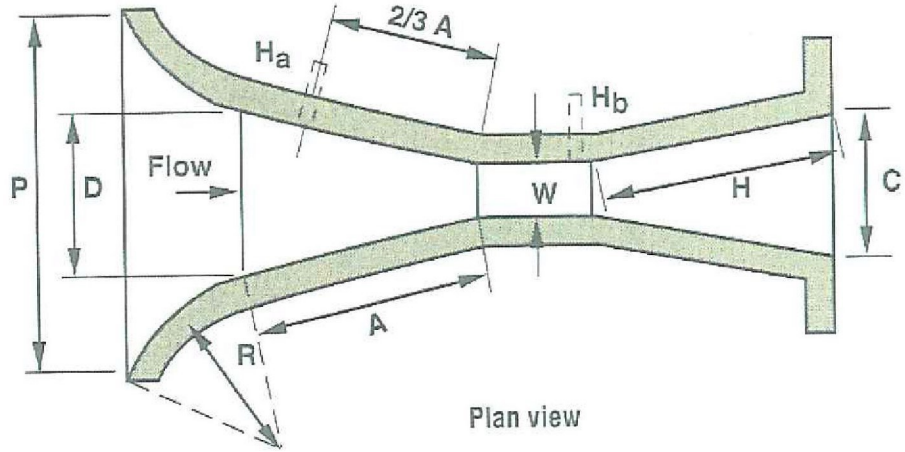

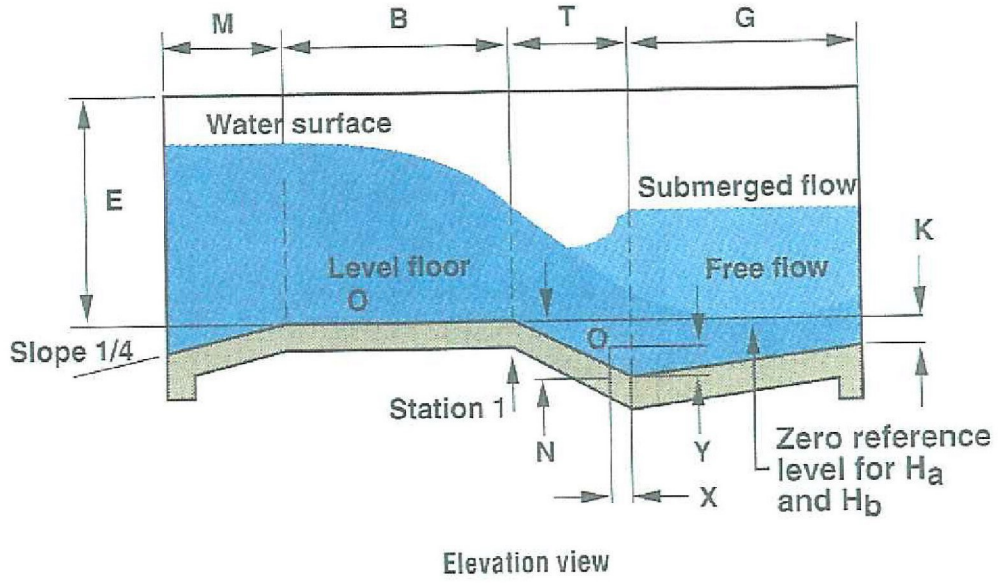

	Dimension (ft.in.)
W	2”
A	1’ 4-5/16”
2/3A	10- 7/8”
B	1’ 4”
C	5-5/16”
D	8-13/32”
E	6’ to 10’
T	4-1/2”
G	10”
H	10-1/8”
K	7/8”
M	N/A
N	1-11/16”
P	N/A
R	N/A
X	5’-8”
Y	1”

Tioga Downs
Wastewater System Improvements Project
In the Town of Nichols
Tioga County, New York

Parshall Flume Dimension

CONFIDENTIAL

APPENDIX K

AERATION BLOWERS

CONFIDENTIAL

SIEMENS

TIOGA DOWNS RACINO WWTF
AERATION BLOWERS DESCRIPTION

2BH Regenerative Blowers

The Siemens 2BH series of Regenerative Blowers offers an incredible compact, quiet, reliable source of vacuum and compressed air. These single and two stage blowers are constructed of high strength materials, yet are lightweight, providing service free of oil, maintenance, vibration and wear.

High efficiency and state of the art designs have replaced older technology utilized by roots-type blowers. Capacities are available up to 1500 cfm and from 14" Hg vacuum to 11 psig.

Blowers are equipped with high quality TEFC motors by Siemens, sized to more exactly match your operating requirements. This Siemens exclusive allows for maximum power efficiency.

Advantages

- Close-coupled design (the motor bolts flush to the rotor housing) simplifies and reduces the size of the total package.
- Direct drive eliminates couplings and belts and their associated alignment and wear problems.
- Belt-drive models available for special applications.
- A cool-running, easily-serviced outboard bearing and no metal-to-metal contact within the rotor housing afford virtually wear-free, maintenance-free service.
- Oil-free operation prevents downstream contamination of gas or components.
- Runs so quiet — as low as 61 dB(A) — extra sound attenuation is usually not required.
- Dynamically-balanced rotor provides vibration-free operation without vibration isolators.
- Mounts in any position with just four bolts.
- Needs no concrete foundation or costly baseframe.
- Shock absorption in the mounting plate prevents transmission of vibration from process machinery into the 2BH blower.
- Manufactured in accordance with ISO 9001 for internationally accepted quality assurance.
- Immediate shipment from stock complete with full working pump, integrated silencer and Siemens TEFC motor protected against atmospheric contamination on motor windings and bearings.
- Thermal Overload protection is standard.

Applications

- Pneumatic Conveying
- Material Handling
- Packaging Machinery
- Vacuum Chucking
- Aerating and Oxygenating Liquids
- Vacuum Lifting/Handling
- Bagging/Bottling
- Soil Remediation
- Thermoforming
- Letter Sorting/ Inserting
- Food Processing
- Computer Equipment
- Medical Equipment
- Paper Processing
- Textile Machinery
- Agricultural Machinery
- Fish Hatcheries
- Printing Copy Machines
- Gas Analyzing
- Spas/Whirlpools
- Plastic Dryer

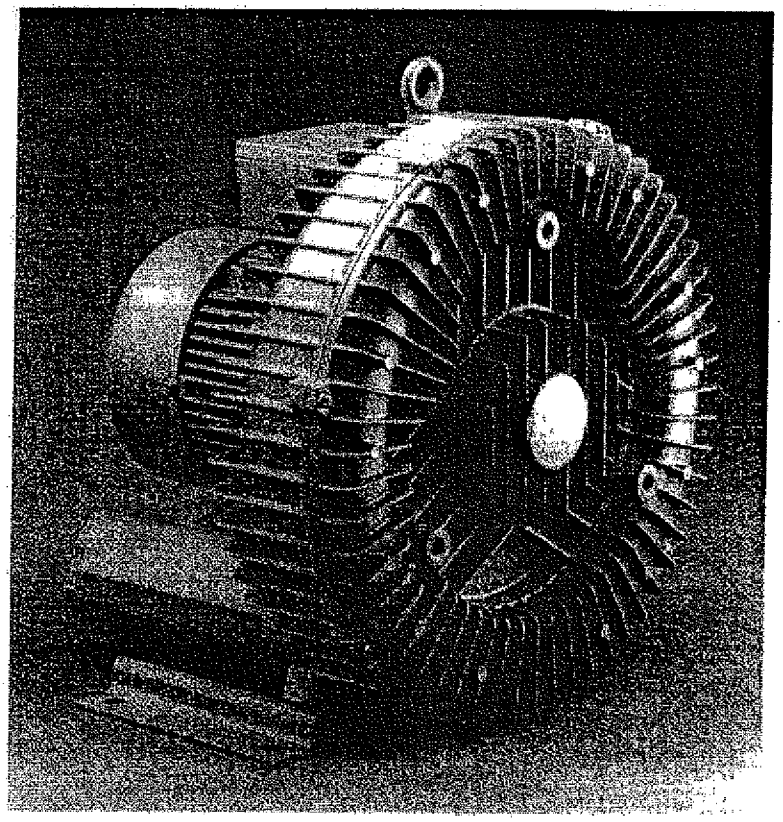

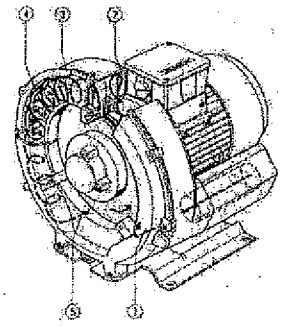

1) Gas enters the inlet port and is picked up by the blades of the impeller.

2) The unique, highly efficient design of the impeller blade accelerates and pushes the gas into the side channel.

3) In the side channel, this velocity is converted into pressure and forced back towards the impeller blades.

4) This spiral path continues until the gas exits the discharge port.

5) The regenerative process results in a high pressure differential.

MAR 2009

CONFIDENTIAL

APPENDIX L

BACKUP GENERATORS

DIESEL GENERATOR SET CATERPILLAR®

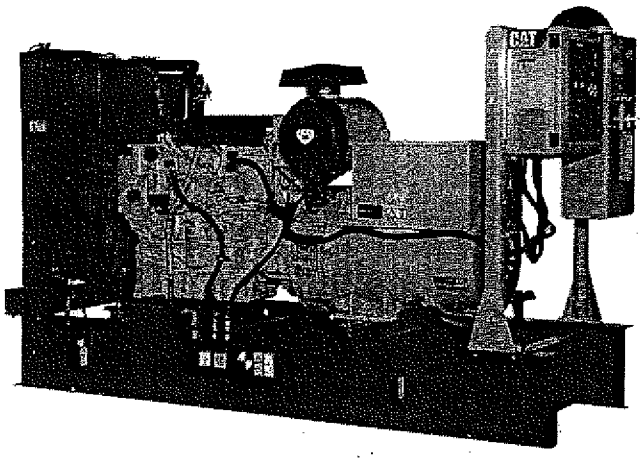

Picture shown may not reflect actual package

STANDBY 125-150 kW
PRIME 114-135 kW
60 Hz

Model	Standby kW (kVA)	Prime kW (kVA)
D125-6	125 (156.3)	114 (142.5)
D150-8	150 (187.5)	135 (168.8)

Tier 3 EPA Approved, Emissions Certified

FEATURES

GENERATOR SET
- Complete system designed and built at ISO 9001 certified facilities
- Factory tested to design specifications at full load conditions

ENGINE
- Governor, electronic
- Electrical system, 12 VDC
- Cartridge type filters
- Battery rack and cables
- Coolant and lube drains piped to edge of base

GENERATOR
- Insulation system, class H
- Drip proof generator air intake (NEMA 2, IP23)
- Electrical design in accordance with BS5000 Part 99, EN61000-6, IEC60034-1, NEMA MG-1.33

CONTROL SYSTEM
- EMCP 3.1 digital control panel
- Vibration isolated NEMA 1 enclosure with lockable hinged door
- DC and AC wiring harnesses

MOUNTING ARRANGEMENT
- Heavy-duty fabricated steel base with lifting points
- Anti-vibration pads to ensure vibration isolation
- Complete OSHA guarding
- Stub-up pipe ready for connection to silencer pipework
- Flexible fuel lines to base with NPT connections

COOLING SYSTEM
- Radiator and cooling fan complete with protective guards
- Standard ambient temperatures up to 50° C (122° F)

CIRCUIT BREAKER
- UL/CSA listed
- 3-pole with solid neutral
- NEMA 1 steel enclosure, vibration isolated
- Electrical stub-up area directly below circuit breaker

AUTOMATIC VOLTAGE REGULATOR
- Voltage within ± 0.5% 3-phase at steady state from no load to full load
- Provides fast recovery from transient load changes

EQUIPMENT FINISH
- All electroplated hardware
- Anticorrosive paint protection
- High gloss polyurethane paint for durability and scuff resistance

QUALITY STANDARDS
- BS4999, BS5000, BS5514, EN61000-6, IEC60034, NEMA MG-1.33, NFPA 110 (with optional equipment)

DOCUMENTATION
- Operation and maintenance manuals provided
- Wiring diagrams included

WARRANTY
- All equipment carries full manufacturer's warranty.

CONFIDENTIAL

OPTIONAL EQUIPMENT*

ENCLOSURE
- B Series weather protective enclosure (includes internal silencer system)
- Sound attenuated enclosure (includes internal silencer system)
  - Single point lift
  - Panel viewing window
  - External emergency stop pushbutton

SILENCER SYSTEM – OPEN UNIT
- Level 1 silencer
- Level 2 silencer
- Level 3 silencer
- Mounting kit
- Through-wall installation kits

ENGINE
- Battery heater
- Lube oil drain pump
- High lube oil temperature shutdown
- Lube oil sump heater

CIRCUIT BREAKER
- Auxiliary voltfree contacts
- Shunt trip

GENERATOR
- Anti-condensation heater
- Permanent magnet generator
- AREP excitation system
- Generator upgrade 1 size

CONTROL SYSTEM
- No control system
- EMCP 3.2 digital control panel

MOUNTING ACCESSORIES
- Seismic (Zone 4) vibration isolators

FUEL SYSTEM
- UL listed closed top-diked skid-mounted fuel tank base (12/24-hour capacity) with fuel alarm (low level/leak detected)
- Critical high fuel alarm
- Critical low fuel level shutdown

COOLING SYSTEM
- Coolant heater
- Low coolant temperature alarm
- Low coolant level shutdown
- Radiator transition flange

REMOTE ANNUNCIATORS
- 16-channel remote annunciator panel (supplied loose)

MISCELLANEOUS ACCESSORIES
- Toolkit
- Additional operator's manual pack
- Special enclosure color
- UL listing
- CSA certification
- French or Spanish language labels

EXTENDED SERVICE CONTRACTS
- Extended Service Coverage available

* Some options may not be available on all models. Not all options are listed.

CONFIDENTIAL

GENERATOR SET DIMENSIONS AND WEIGHTS

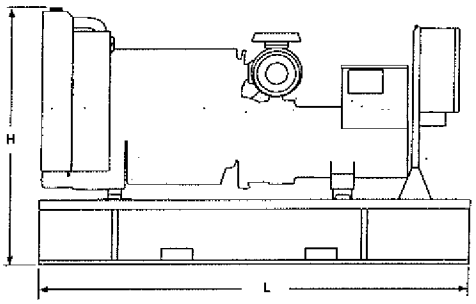

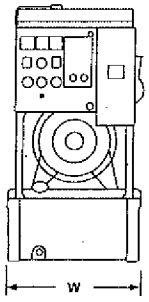

Model	Length mm (in)	Width mm (in)	Height mm (in)	Weight kg (lb)*
D125-8	2780 (109.4)	900 (35.4)	1543 (60.7)	1347 (2,970)
D150-8	2780 (109.4)	900 (35.4)	1543 (60.7)	1407 (3,102)

NOTE: General configuration not to be used for installation. See specific dimensional drawings for detail.

*Includes oil and coolant

CONFIDENTIAL

SPECIFICATIONS

GENERATOR

Voltage regulation ..... ± 0.5% 3-phase at steady state from no load to full load
Frequency ..... ± 0.25% for constant load, no load to full load
Waveform distortion ..... THD < 4%, at no load
Radio interference ..... Compliance with EN61000-6
Telephone interference ..... TIF < 50, THF < 2%
Overspeed limit ..... 2250 rpm
Insulation ..... Class H
Temperature rise ..... Within Class H limits
Available voltages 277/480, 266/460, 120/240, 127/220, 120/208, 347/600
Deration ..... Consult factory for available outputs
Ratings ..... At 30° C (86° F), 152.4 m (500 ft), 60% humidity, 0.8 pf

ENGINE

Manufacturer ..... Caterpillar
Type 4-cycle
Bore – mm (in) 105.0 (4.13)
Stroke – mm (in) 127.0 (5.00)
Governor Type ..... Electronic
Class G2
Piston speed – m/sec (ft/sec) 7.62 (25.0)
Engine speed – rpm 1800
Air cleaner type ..... Dry, replaceable paper element type with restriction indicator

D125-6 – C6.6 ACERT

Aspiration ..... ATAAC
Cylinder configuration ..... In-line 6
Displacement – L (cu in) 6.6 (404)
Compression ratio 16.3:1
Max power at rated rpm – kW (hp)
  Standby 161.6 (217)
  Prime 144.6 (194)
BMEP – kPa (psi)
  Standby 1633 (237)
  Prime 1461 (212)
Regenerative power – kW (hp) 14.9 (20)

D150-8 – C6.6 ACERT

Aspiration ..... ATAAC
Cylinder configuration ..... In-line 6
Displacement – L (cu in) 6.6 (404)
Compression ratio 16.3:1
Max power at rated rpm – kW (hp)
  Standby 171.3 (230)
  Prime 154.4 (207)
BMEP – kPa (psi)
  Standby 1731 (251)
  Prime 1560 (226)
Regenerative power – kW (hp) 14.9 (20)

CONTROL PANEL

- Heavy duty sheet steel enclosure with lockable hinged door
- Vibration isolated from generating set
- LCD display
- AC metering
- DC metering
- Fail to start shutdown
- Low oil pressure shutdown
- High engine temperature
- Low/high battery voltage
- Underspeed/overspeed
- Loss of engine speed detection
- 2 spare fault channels
- 20 event fault log
- 2 LED status indicators
- Lockdown emergency stop push button

RATING DEFINITIONS AND CONDITIONS

Standby – Applicable for supplying continuous electrical power (at variable load) in the event of a utility power failure. No overload is permitted on these ratings. The generator is peak rated (as defined in ISO8528-3).

Prime – Applicable for supplying continuous electrical power (at variable load) in lieu of commercially purchased power. There is no limitation to the annual hours of operation and the generator set can supply 10 percent overload power for 1 hour in 12 hours.

CONFIDENTIAL

D150-8 (3-Phase)

Materials and specifications are subject to change without notice.

Generator Set Technical Data – 1800 rpm/60 Hz			Standby		Prime	
Power Rating	kW	kVA	150	187.5	135	168.8
Lubricating System						
Type: full pressure						
Oil filter: spin-on, full flow						
Oil cooler: watercooled						
Oil type required: API CH4/CI4						
Total oil capacity	L	U.S. gal	16.5	4.4	16.5	4.4
Oil pan	L	U.S. gal	15.5	4.1	15.5	4.1
Fuel System						
Generator set fuel consumption						
100% load	L/hr	gal/hr	44.7	11.8	41.5	11.0
75% load	L/hr	gal/hr	36.8	9.7	34.3	9.1
50% load	L/hr	gal/hr	28.4	7.5	26.6	7.0
Engine Electrical System						
Voltage/ground: 12/negative						
Battery charging generator ampere rating	amps		100		100	
Cooling System						
Water pump type: centrifugal						
Radiator system capacity incl. engine	L	U.S. gal	21.0	5.5	21.0	5.5
Maximum coolant static head	m H_2O	ft H_2O	8.0	26.0	8.0	26.0
Coolant flow rate	L/hr	U.S. gal/hr	10,200	2,693	10,200	2,693
Minimum temperature to engine	°C	°F	85	185	85	185
Temperature rise across engine	°C	°F	7.9	14.2	7.9	14.2
Heat rejected to coolant at rated power	kW	Btu/min	78.4	4,461	73.5	4,182
Total heat radiated to room at rated power	kW	Btu/min	13.6	774	12.7	723
Radiator fan load	kW	hp	8.0	10.7	8.0	10.7
Air Requirements						
Combustion air flow	m³/min	cfm	12.9	456	12.6	445
Maximum air cleaner restriction	kPa	in H_2O	5	20	5	20
Radiator cooling air (zero restriction)	m³/min	cfm	327	11,548	327	11,548
Generator cooling air	m³/min	cfm	26.4	923	26.4	923
Allowable air flow restriction (after radiator)	kPa	in H_2O	0.12	0.50	0.12	0.50
Cooling airflow (@ rated speed)						
Rate with restriction	m³/min	cfm	317	11,195	317	11,195
Exhaust System						
Maximum allowable backpressure	kPa	in Hg	15	4.4	15	4.4
Exhaust flow at rated kW	m³/min	cfm	31.6	1,112	30.5	1,077
Exhaust temperature at rated kW –						
Dry exhaust	°C	°F	625	1,157	610	1,130
Generator Set Noise Rating*						
(without attenuation) at 1 m (3 ft)	dB(A)		97.3		97.3	

Generator Technical Data		277/480V	266/460V	127/220V	120/240V 120/208V	347/600V
Motor Starting Capability: (30% voltage dip)*	(kVA)					
	Self excited	420	391	363	330	N/A
	PM excited**	548	511	476	433	511
	AREP excited	548	511	476	433	511
Full Load Efficiencies:	Standby	92.9	92.9	92.9	92.5	92.9
	Prime	93.1	93.1	93.1	92.8	93.1
Reactances (per unit):	X_d	2.90	3.16	3.45	3.86	3.16
	X'_d	0.10	0.11	0.12	0.13	0.11
Reactances	X''_d	0.053	0.063	0.069	0.078	0.063
shown are	X_q	1.74	1.89	2.07	2.32	1.89
applicable to the	X''_q	0.069	0.075	0.082	0.092	0.075
standby rating.	X_2	0.063	0.069	0.075	0.084	0.069
	X_0	0.005	0.005	0.006	0.007	0.005
Time Constants:		T'_d 100 ms	T''_d 10 ms	T'_{do} 2966 ms		T_a 15 ms

* dB(A) levels are for guidance only
** With PMG Excited Option AVR12

CONFIDENTIAL

CATERPILLAR®

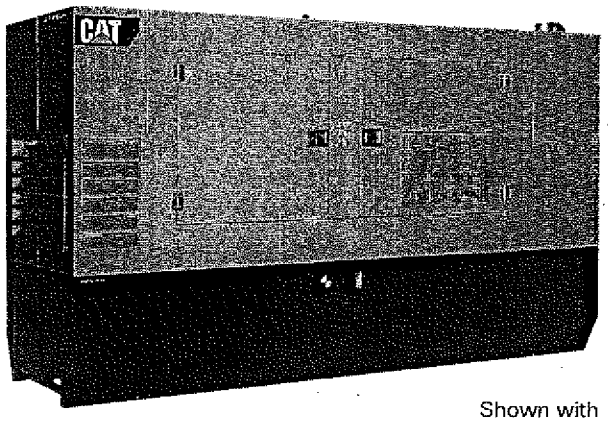

Shown with Optional Equipment

CAE – SOUND ATTENUATED WEATHERPROOF ENCLOSURES

These fully weatherproof, sound attenuated, factory installed, enclosures incorporate internally mounted exhaust silencers that reduce engine noise by –25 dbA and fabricated steel skidbase. Optional UL listed tanks are available.
These enclosures are of extremely rugged construction to withstand outdoor exposure and rough handling common on many construction sites. They are designed on modular principles with many interchangeable components permitting on-site repair.

FEATURES

HIGHLY CORROSION RESISTANT CONSTRUCTION

- Stainless steel flush fitting latches and hinges tested and proven to withstand extreme conditions of corrosion
- Zinc plated or stainless steel fasteners
- Body made from steel components treated with polyester powder coating

EXCELLENT ACCESS FOR MAINTENANCE

- Full length extra wide doors on each side
- Doors top hung and supported by gas struts
- Radiator fill access
- Lube oil and cooling water drains piped to exterior of the enclosure skidbase

SECURITY AND SAFETY

- Lockable access doors
- Stub-up cover sheets for "rodent proofing"
- Cooling fan and battery charging alternator fully guarded
- Fuel fill and battery can only be reached via lockable access doors (only provided when optional fuel tank is ordered)
- Exhaust silencing system totally enclosed for operator safety

TRANSPORTABILITY

- Lifting points on baseframe
- Tested and certified single point lifting facility

OPTIONS

- FTP Integral welded fuel tank
- Control panel viewing window
- Emergency stop push button (red) mounted flush on exterior enclosure wall

CONFIDENTIAL

SOUND LEVELS

Generator Set Model	1800 rpm (60 Hz)					
	15 m (50 ft)		7 m (23 ft)		1 m (3 ft)	
	No Load (dBA)	Full Load* (dBA)	No Load (dBA)	Full Load* (dBA)	No Load (dBA)	Full Load* (dBA)
D125-6	63.8	65.7	69.8	71.7	82.1	83.2
D150-8	63.9	66.3	69.9	72.3	82.1	83.5
D175-2	67.8	68.4	73.8	74.4	84.4	85.0

*Noise levels tested at prime ratings.

Information contained in this publication may be considered confidential.
Discretion is recommended when distributing.
Materials and specifications are subject to change without notice.
CAT, CATERPILLAR, their respective logos, "Caterpillar Yellow" and the POWER EDGE trade dress, as well as corporate and product identity used herein, are trademarks of Caterpillar and may not be used without permission.

Market: N. America

LEHE7064-01 (06-07)

www.cat-electricpower.com

© 2007 Caterpillar
All Rights Reserved.
Printed in U.S.A.

CONFIDENTIAL

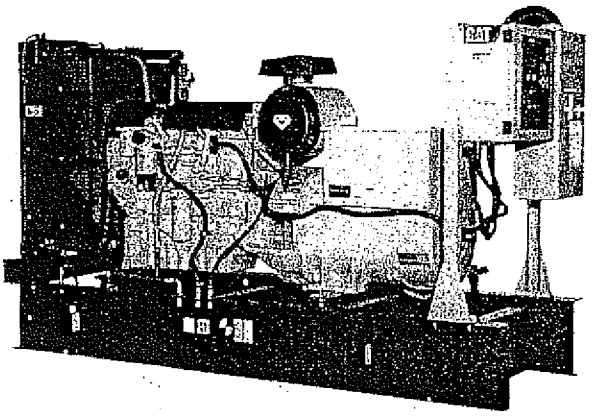

Picture shown may not reflect actual package.

STANDBY 25-30 kW
PRIME 22.5-27 kW

60 Hz

Model	Standby kW (kVA)	Prime kW (kVA)
D25-6	25 (31.3)	22.5 (28.5)
D25-6S	25 (25)	22.5 (22.5)
D30-8	30 (37.5)	27 (33.8)
D30-6S	30 (30)	27 (27)

Tier 2 EPA Approved, Emissions Certified

FEATURES

GENERATOR SET
- Complete system designed and built at ISO 9001 certified facilities
- Factory tested to design specifications at full load conditions

ENGINE
- Governor, mechanical
- Electrical system, 12 VDC
- Cartridge type filters
- Battery rack and cables
- Coolant and lube drains piped to edge of base

GENERATOR
- Insulation system, class H
- Drip proof generator air intake (NEMA 2, IP23)
- Electrical design in accordance with BS5000 Part 99, IEC60034-1, EN61000-6, NEMA MG-1.33

CONTROL SYSTEM
- EMCP 3.1 digital control panel
- Vibration isolated NEMA 1 enclosure with lockable hinged door
- DC and AC wiring harnesses

MOUNTING ARRANGEMENT
- Heavy-duty fabricated steel base with lifting points
- Anti-vibration pads to ensure vibration isolation
- Complete OSHA guarding
- Stub-up pipe ready for connection to silencer pipework
- Flexible fuel lines terminated at skid base with NPT connections

COOLING SYSTEM
- Radiator and cooling fan complete with protective guards
- Standard ambient temperatures up to 50° C (122° F)

CIRCUIT BREAKER
- UL/CSA listed
- 3-pole with solid neutral
- NEMA 1 steel enclosure, vibration isolated
- Electrical stub-up area directly below circuit breaker

AUTOMATIC VOLTAGE REGULATOR
- Voltage within ± 0.5% 3 phase and ± 1.0% single phase at steady state from no load to full load
- Provides fast recovery from transient load changes

EQUIPMENT FINISH
- All electroplated hardware
- Anticorrosive paint protection
- High gloss polyurethane paint for durability and scuff resistance

QUALITY STANDARDS
- BS4999, BS5000, BS5514, IEC60034, EN61000-6, NEMA MG-1.33, NFPA 110 (with optional equipment)

DOCUMENTATION
- Operation and maintenance manuals provided
- Wiring diagrams included

WARRANTY
- All equipment carries full manufacturer's warranty

CONFIDENTIAL

OPTIONAL EQUIPMENT*

ENCLOSURE
- B Series weather protective enclosure (includes internal silencer system)
- Sound attenuated enclosure (includes internal silencer system)
- Super sound attenuated enclosure (includes internal silencer system)
  - Panel viewing window
  - External emergency stop pushbutton

SILENCER SYSTEM – OPEN UNIT
- Level 1 silencer
- Level 2 silencer
- Level 3 silencer
- Mounting kit
- Through-wall installation kits

ENGINE
- Electronic governor
- Battery heater
- Lube oil drain pump
- Lube oil sump heater

CIRCUIT BREAKER
- Auxiliary voltfree contacts
- Shunt trip (100+ amp breakers)

MOUNTING ACCESSORIES
- Seismic (Zone 4) vibration isolators

GENERATOR
- Anti-condensation heater
- AREP excitation system (D25-6, D30-8)
- Generator upgrade 1 size (D25-6, D30-8)

CONTROL SYSTEM
- No control system
- EMCP 3.2 digital control panel

FUEL SYSTEM
- Single-walled steel fuel tank
- UL listed closed top-diked skid-mounted fuel tank base (24-hour capacity) with fuel alarm (low level/leak detected)
- Critical high fuel alarm
- Low fuel level alarm and shutdown

REMOTE ANNUNCIATORS
- Remote annunciator panel (supplied loose)

COOLING SYSTEM
- Coolant heater
- Low coolant temperature alarm
- Low coolant level shutdown
- Radiator transition flange

MISCELLANEOUS ACCESSORIES
- Toolkit
- Additional operator's manual pack
- Special enclosure color
- UL listing
- CSA certification
- French or Spanish language labels

EXTENDED SERVICE CONTRACTS
- Extended service coverage available

* Some options may not be available on all models. Not all options are listed.

GENERATOR SET DIMENSIONS AND WEIGHTS

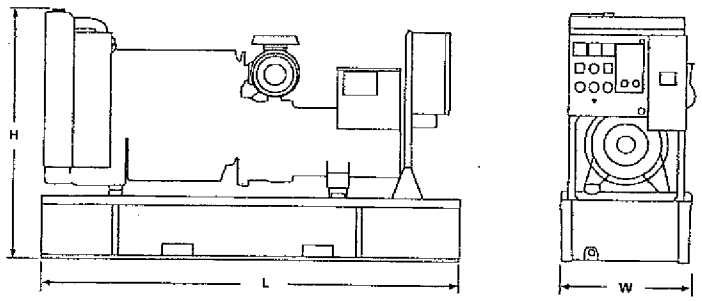

Model	Length mm (in)	Width mm (in)	Height mm (in)	Weight kg (lb)*
D25-6	1770 (69.7)	714 (28.1)	1360 (53.5)	780 (1,720)
D25-6S	1770 (69.7)	714 (28.1)	1360 (53.5)	780 (1,720)
D30-8	1770 (69.7)	714 (28.1)	1360 (53.5)	790 (1,742)
D30-6S	1770 (69.7)	714 (28.1)	1360 (53.5)	790 (1,742)

NOTE: General configuration not to be used for installation. See specific dimensional drawings for detail.

Dimensions and weights shown are for the open skid configuration.

*Includes oil and coolant

CONFIDENTIAL

SPECIFICATIONS

GENERATOR

Voltage regulation ..... ± 0.5% 3 PH and ± 1% Single PH at steady state from no load to full load
Frequency ..... ± 0.8% for constant load, no load to full load
Waveform distortion ..... THD < 4%, at no load
Radio interference ..... Compliance with EN61000-6
Telephone interference ..... TIF < 50, THF < 2%
Overspeed limit ..... 2250 rpm
Insulation ..... Class H
Temperature rise ..... Within Class H limits
Available voltages ..... 1-phase – 120/240, 115/230, 110/220 3-phase – 277/480, 120/240, 127/220, 120/208
Deration ..... Consult factory for available outputs
Ratings ..... At 30° C (86° F), 152.4 m (500 ft), 60% humidity, 1.0 pf (1-phase), 0.8 pf (3-phase)

ENGINE

Manufacturer ..... Caterpillar
Type 4-cycle
Aspiration ..... Natural
Stroke – mm (in) 127 (5.0)
Piston speed – m/sec (ft/sec) 7.62 (25.0)
Engine speed – rpm 1800
Air cleaner type ..... Dry, replaceable paper element type with restriction indicator

D25-6, D25-6S, D30-8, D30-6S – C3.3
Cylinder configuration ..... In-line 3
Displacement – L (cu in) 3.3 (202)
Bore – mm (in) 105 (4.13)
Compression ratio 19.3:1
Governor
Type ..... Mechanical and electrical
Class ..... G2 and G3
Max power at rated rpm – kW (hp)
Standby 35 (46.9)
Prime 31.5 (42.2)
BMEP – kPa (psi)
Standby 735 (106.6)
Prime 660 (95.7)
Regenerative power – kW (hp) 9.0 (12.0)

CONTROL PANEL

- Heavy duty sheet steel enclosure with lockable hinged door
- Vibration isolated from generating set
- LCD display
- AC metering
- DC metering
- Fail to start shutdown
- Low oil pressure shutdown
- High engine temperature
- Low/high battery voltage
- Underspeed/overspeed
- Loss of engine speed detection
- 2 spare fault channels
- 20 event fault log
- 2 LED status indicators
- Lockdown emergency stop push button

RATING DEFINITIONS AND CONDITIONS

Standby – Applicable for supplying continuous electrical power (at variable load) in the event of a utility power failure. No overload is permitted on these ratings. The generator is peak rated (as defined in ISO8528-3).

Prime – Applicable for supplying continuous electrical power (at variable load) in lieu of commercially purchased power. There is no limitation to the annual hours of operation and the generator set can supply 10 percent overload power for 1 hour in 12 hours.

CONFIDENTIAL

D25-6 (3-Phase)

Materials and specifications are subject to change without notice.

Generator Set Technical Data – 1800 rpm/60 Hz			Standby		Prime	
Power Rating	kVA	kW	31.3	25	28.5	22.8
Lubricating System						
Type: full pressure						
Oil filter: spin-on, full flow						
Oil cooler: Modine						
Oil type required: API CG-4 or CH-4						
Total oil capacity	L	U.S. gal	8.3	2.19	8.3	2.19
Oil pan	L	U.S. gal	7.8	2.06	7.8	2.06
Fuel System						
Generator set fuel consumption						
100% load	L/hr	gal/hr	8.4	2.2	7.7	2.0
75% load	L/hr	gal/hr	6.5	1.7	5.9	1.6
50% load	L/hr	gal/hr	4.5	1.2	4.2	1.1
Engine Electrical System						
Voltage/ground: 12/negative						
Battery charging generator ampere rating	amps		65		65	
Cooling System						
Water pump type: centrifugal						
Radiator system capacity incl. engine	L	U.S. gal	10.2	2.69	10.2	2.69
Maximum coolant static head	m H_2O	ft H_2O	10.2	33.2	10.2	33.2
Coolant flow rate	L/hr	U.S. gal/hr	9060	1,993	9060	1,993
Minimum temperature to engine	°C	°F	70	158	70	158
Temperature rise across engine	°C	°F	1.9	3.4	1.9	3.4
Heat rejected to coolant at rated power	kW	Btu/min	19.0	1,103	17.0	955
Total heat radiated to room at rated power	kW	Btu/min	9.0	500	8.0	427
Radiator fan load	kW	hp	0.5	0.7	0.5	0.7
Air Requirements						
Combustion air flow	m^3/min	cfm	2.6	91.8	2.6	91.8
Maximum air cleaner restriction	kPa	in H_2O	6.6	26.5	6.6	26.5
Radiator cooling air (zero restriction)	m^3/min	cfm	109	3,856	109	3,856
Generator cooling air	m^3/min	cfm	10.8	382	10.8	382
Allowable air flow restriction (after radiator)	kPa	in H_2O	0.12	0.5	0.12	0.5
Cooling airflow (@ rated speed)						
Rate with restriction	m^3/min	cfm	86.7	3,062	86.7	3,062
Exhaust System						
Maximum allowable backpressure	kPa	in Hg	15	4.43	15	4.43
Exhaust flow at rated kW	m^3/min	cfm	6.52	230	6.1	215
Exhaust temperature at rated kW – Dry exhaust	°C	°F	580	1,079	530	986
Generator Set Noise Rating* (without attenuation) at 1 m (3 ft)	dB(A)		92.4		92.1	

Generator Technical Data		277/480V	120/240V 120/208V	127/220V	347/600V
Motor Starting Capability: (30% voltage dip)	(kVA)				
	Self excited	67	53	58	N/A
	AREP excited	81	64	70	128
Full Load Efficiencies:	Standby	89.7	89.0	89.4	89.7
	Prime	89.9	89.3	89.7	89.6
Reactances (per unit):	X_d	1.89	2.51	2.25	1.66
	X'_d	0.10	0.14	0.12	0.07
Reactances shown are applicable to the standby rating.	X''_d	0.052	0.069	0.062	0.037
	X_q	0.94	1.26	1.12	0.99
	X''_q	0.073	0.098	0.087	0.046
	X_2	0.063	0.085	0.076	0.041
	X_0	0.005	0.007	0.006	0.003
Time Constants:		t'd 25 ms	t''d 2.5 ms	t'do 452 ms	ta 4 ms

* dB(A) levels are for guidance only

CONFIDENTIAL

ULCERT
UL2200 LISTING

Includes the following:

ALTERNATOR

An alternator with UL Recognized insulation system (UL1446).

PMG and AREP Alternators are available. The automatic voltage regulators are UL Recognized.

ELECTRONICS

The AC and DC wiring harnesses are made with UL listed cable. The power wiring harnesses are made with UL listed cable and UL Recognized lugs, and circuit breakers are UL listed.

CONTROL PANEL

The control panel wiring is made with UL listed cable. Control Panel components are UL listed and used in line with UL listed or Recognized approval (UL508A).

NOTE: UL listing is applicable to the EMCP 3.1 and EMCP 3.2 control panels.

TESTING

All UL listed sets are rigorously tested in line with UL certification requirements.

LABELING

Labeling meets UL requirements.

ELECTRICAL OPTIONS

The table below shows electrical options that meet UL requirements:

EBH	Battery Heater 208-240 Volt AC
EBHL	Battery Heater 110-120 Volt AC
LUBS1	High Lube Oil Temperature Shutdown
EOS	Lube Oil Sump Heater 208-240 Volt AC
EOSL	Lube Oil Sump Heater 110-120 Volt AC
WCA1	Low Coolant Level Shutdown
WSS1	Low Coolant Temperature Alarm
AH1H	Anti-Condensation Heater 208-240 Volt AC
AH1L	Anti-Condensation Heater 110-120 Volt AC
WHH	Coolant Heater 208-240 Volt AC
WHL	Coolant Heater 110-120 Volt AC
GOVE1	Electronic Governor (Fully Adjustable)
FSS1	Critical Low Fuel Level Shutdown
FSS2	Low Fuel Level Alarm
FSS5	Critical High Fuel Alarm
PBC3UL	UL Listed Battery Charger
PBC10UL	UL Listed Battery Charger
PMBCUL3	UL Listed panel mounted battery charger
PMBCUL5	UL Listed panel mounted battery charger

MECHANICAL OPTIONS

Mechanical options do not require UL Listing and therefore are not affected.

The exceptions to this are:

FUEL TANKS

If a fuel tank is ordered with the unit, it must be UL listed. Two versions are available to provide typically 12 hour (FCUL1) and 24 hour (FCUL2) standby operation.

ENCLOSURES

Factory installed enclosures are thoroughly tested to meet UL requirements. Weatherproof, sound attenuated and super sound attenuated versions are available.

DIESEL MODELS AVAILABLE FOR UL CERTIFICATION

60 Hz Single Phase Diesel Fuel Generator Set		60 Hz 3 Phase Diesel Fuel Generator Set	
D13-2S	D40-4S	D13-2	D60-4
D17-2S	D50-4S	D18-2	D80-6
D20-4S	D60-6S	D20-4	D100-6
D25-6S	D80-2S	D25-6	D125-6
D30-6S	D100-6S	D30-8	D150-8
		D40-4	D175-2
		D50-4	

Note: UL Certification is available on diesel fueled generator sets up to 200 kW. This range has a maximum of 600 V, 60 Hz. Single phase has a 1.0 pf rating and 3 phase has a 0.8 pf rating. For details of available voltage ratings refer to Price List.

Information contained in this publication may be considered confidential.
Discretion is recommended when distributing.
Materials and specifications are subject to change without notice.
CAT, CATERPILLAR, their respective logos, "Caterpillar Yellow" and the POWER EDGE trade dress, as well as corporate and product identity used herein, are trademarks of Caterpillar and may not be used without permission.

Market: N. America
LEHE4012-02 (06-07)
www.cat-electricpower.com

© 2007 Caterpillar
All Rights Reserved.
Printed in U.S.A.

CONFIDENTIAL

CSA CERTIFICATION

CSA certification includes the following:

ALTERNATOR

CSA certified alternator.

ELECTRONICS

The AC and DC harnesses are made with CSA approved wire. The power harness is made with CSA approved cable, CSA approved lugs, and CSA approved circuit breakers.

CONTROL PANEL

The control panel wiring is made with CSA approved wire. Control panel components are CSA approved and used in line with CSA approval.

Note: CSA certification is applicable to the EMCP 3.1 and EMCP 3.2 control panels.

TESTING

All CSA certified sets are rigorously tested in line with CSA certification requirements.

LABELING

Labeling meets CSA requirements. French labels can also be ordered as an option.

ELECTRICAL OPTIONS

EBH	Battery Heater 110-120 Volt AC
PBC3UL	UL Listed Battery Charger (AA)
PBC10UL	UL Listed Battery Charger (AA)
LUBS1	High Lube Oil Temperature Shutdown
EOS	Lube Oil Sump Heater
WCA1	Low Coolant Level Shutdown
WSS1	Low Coolant Temperature Alarm
AH1	Anti-Condensation Heater
WHH	Coolant Heater 208-240 Volt AC
GOVE	Electronic Governor (Fully Adjustable)
FSS1	Critical Low Fuel Level Shutdown
FSS2	Low Fuel Level Alarm
FSS5	Critical High Fuel Alarm

OPTIONS

Mechanical options do not require CSA certification and therefore are not affected. The table below shows electrical options that meet CSA requirements; all alternator options meet CSA requirements.

DIESEL MODELS AVAILABLE FOR CSA CERTIFICATION

60 Hz Single Phase Diesel Fuel Generator		Set 60 Hz 3-Phase Diesel Fuel Generator Set	
D13-2S	D40-4S	D13-2	D60-4
D17-2S	D50-4S	D18-2	D80-6
D20-4S	D60-6S	D20-4	D100-6
D25-6S	D80-2S	D25-6	D125-6
D30-6S	D100-6S	D30-8	D150-8
		D40-4	D175-2
		D50-4	

Market: N. America

LEHE5324-02 (06-07)

Information contained in this publication may be considered confidential.
Discretion is recommended when distributing.
Materials and specifications are subject to change without notice.
CAT, CATERPILLAR, their respective logos, "Caterpillar Yellow" and the POWER EDGE trade dress, as well as corporate and product identity used herein, are trademarks of Caterpillar and may not be used without permission.

www.cat-electricpower.com

© 2007 Caterpillar
All Rights Reserved.
Printed in U.S.A.

CONFIDENTIAL

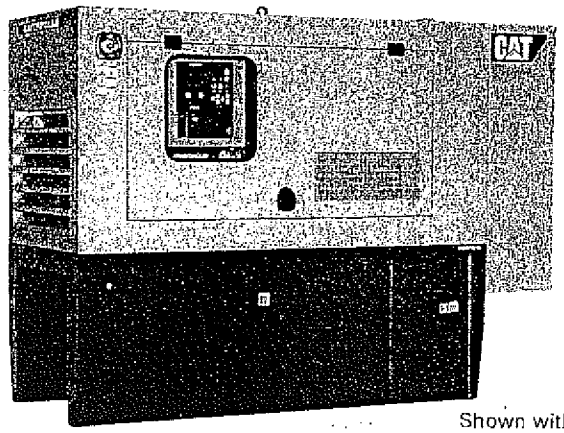

Shown with Optional Equipment

CAE – SOUND ATTENUATED WEATHERPROOF ENCLOSURES

D25-6 to D100-6

D25-6S to D100-6S

These fully weatherproof, sound attenuated, factory installed, enclosures incorporate internally mounted exhaust silencers that reduce engine noise by –25 dBA and fabricated steel skidbase. Optional UL listed tanks are available. These enclosures are of extremely rugged construction to withstand outdoor exposure and rough handling common on many construction sites. They are designed on modular principles with many interchangeable components permitting on-site repair.

FEATURES

HIGHLY CORROSION RESISTANT CONSTRUCTION

- Stainless steel flush fitting latches and hinges tested and proven to withstand extreme conditions of corrosion
- Zinc plated or stainless steel fasteners
- Body made from steel components treated with polyester powder coating

EXCELLENT ACCESS FOR MAINTENANCE

- Full length extra wide doors on each side
- Doors top hung and supported by gas struts
- Radiator fill access
- Lube oil and cooling water drains piped to exterior of the enclosure skidbase

SECURITY AND SAFETY

- Lockable access doors
- Stub-up cover sheets for "rodent proofing"
- Cooling fan and battery charging alternator fully guarded
- Fuel fill and battery can only be reached via lockable access doors (only provided when optional fuel tank is ordered)
- Exhaust silencing system totally enclosed for operator safety

TRANSPORTABILITY

- Lifting points on baseframe
- Tested and certified single point lifting facility

OPTIONS

- Control panel viewing window
- Emergency stop push button (red) mounted flush on exterior enclosure wall

CONFIDENTIAL

SOUND LEVELS

Generator Set Model	1800 rpm (60 Hz)					
	15 m (50 ft)		7 m (23 ft)		1 m (3 ft)	
	No Load (dBA)	Full Load (dBA)	No Load (dBA)	Full Load (dBA)	No Load (dBA)	Full Load (dBA)
D25-6	66.7	73.2	72.7	79.2	85.3	92.2
D25-6S	66.7	73.2	72.7	79.2	85.3	92.2
D30-8	66.7	75.5	72.7	81.5	85.3	94.4
D30-6S	66.7	75.5	72.7	81.5	85.3	94.4
D40-4	64.3	68	70.3	74	79.8	83.5
D40-4S	64.3	68	70.3	74	79.8	83.5
D50-4	63.6	64	69.6	70	79.5	79.4
D50-4S	63.6	64	69.6	70	79.5	79.4
D60-4	63.6	64.7	69.6	70.7	79.5	80.2
D60-6S	65.3	66.5	71.3	72.5	82.7	83
D80-6	65.3	67	71.3	73	82.7	83.4
D80-2S	65.3	67	71.3	73	82.7	83.4
D100-6	65.3	67.7	71.3	73.7	82.7	83.9
D100-6S	65.3	67.7	71.3	73.7	82.7	83.9

The sound pressure level data shown is quoted as free field and is for guidance only.
Actual levels produced may vary according to site conditions.

Market: N. America

LEHE4033-02 (06-07)

Information contained in this publication may be considered confidential.
Discretion is recommended when distributing.
Materials and specifications are subject to change without notice.
CAT, CATERPILLAR, their respective logos, "Caterpillar Yellow" and the POWER EDGE trade dress, as well as corporate and product identity used herein, are trademarks of Caterpillar and may not be used without permission.

www.cat-electricpower.com

© 2007 Caterpillar
All Rights Reserved.
Printed in U.S.A.

CONFIDENTIAL

FITTING	DESCRIPTION		GAUGE LENGTH
A	N/A	N/A	N/A
B	N/A	N/A	EMPTY WEIGHT
C	N/A		930 LBS.
D	N/A		
E	2-5/16" ADJUSTABLE BALL COUPLER		
F	STEEL FENDERS		
G	ELECTRIC BRAKES		

MODEL/GAL 7000 LB OD

CUSTOMER

WO#

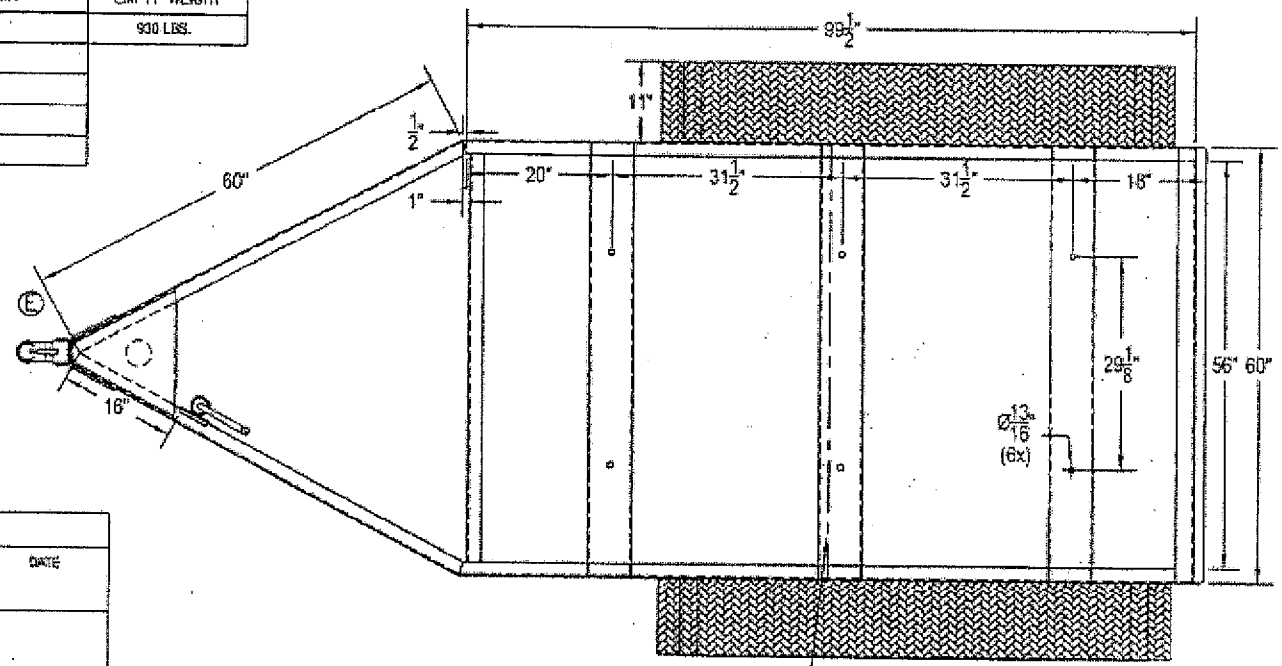

APPROVAL CHECKLIST	
REVIEWED BY	DATE
GENSET DELIVERY DATE	
	NO EXCEPTIONS TAKEN / RELEASE FOR PRODUCTION
	NOT APPROVED / REVISE AND SUBMIT
APPROVAL CHECKLIST MUST BE SIGNED PRIOR TO PRODUCTION	

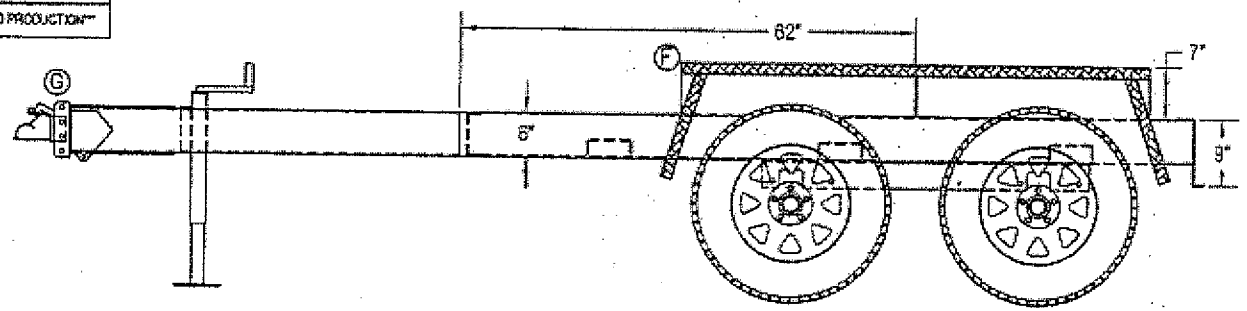

SPECIAL INSTRUCTIONS	
1	OPEN DECK TRAILER

JRS Custom Fab.
OCALA, FLORIDA
PHONE(352) 351-2100 FAX(352) 351-5881

JOB NAME		FILE	WO	DWG NO	7000 LB OD	REV
DRAWN BY	B.K.	DATE	2/22/08	SCALE	N.T.S.	TANK SPEC	OPEN DECK	UNIT	025-8/030-8 CAE W 24HR TANK

CONFIDENTIAL

APPENDIX M

GREASE TRAP SPECIFICATIONS AND CALCULATIONS

KISTNER CONCRETE PRODUCTS INC.
8713 READ ROAD
E. PEMBROKE, N.Y.
14056
(716) 894-2267

PRODUCT DESIGNATION

5000 GALLON "K-SEP" GREASE INTERCEPTOR

DWG. NO.
GI-KSEP-GI5000©
1-18-07

SPECIFICATIONS:
CONCRETE: 4,000 P.S.I. @ 28 DAYS.
ENTRAINED AIR: 5% - 9%.
STEEL: A.S.T.M. A496-A615 GRADE 60-60 KSI.
DESIGN LOADING: A-0.3/300PSF/WALKWAYS. FLOTATION FORCES NOT ACCOUNTED FOR.
PIPING: OUTLET TEES, DROP LEGS & FITTINGS SUPPLIED & INSTALLED BY CONTR. CONTR. TO DRILL MIN. 6-2" HOLES BELOW TEE FITTING STARTING 6" OFF FLOOR.
FRAME & COVER & RISERS: SEE DWG. #ST-NTINKRSR - "NON-TRAFFIC TANK RISERS".
COVER OVER TANK: MAX. 3' OF EARTH FILL.
WEIGHT:
TOP SECTION: 16,829 LBS.
MID-SECTION: 8,936 LBS.
BOTTOM SECTION: 13,410 LBS.
TOTAL: 39,175 LBS.

WATERTIGHT JOINT DETAIL
SCALE: N/A

O:\Drawings\Product Workbooks\024-Squarerectangular-07X14-84X168\GI5000.dwg

CONFIDENTIAL

Tioga Downs WWTP | Calculated by | LTZ | 5/28/2009
Grease Trap Design | Checked by | GMC | 5/29/2009

Based on NYSDEC - Design Standards for Waterwater Treatment Works (1988)

Tank Size (gallons) = (D)(GL)(ST)(HR/2)(LF)

D =	250	Seats in the Restaurant
GL =	3	gallons per meal
ST =	2.5	
HR/2 =	8	(based upon 16 hour days)
LF =	1.25	

Tank Size = 18750 gallons

CONFIDENTIAL

Exhibit VIII.C.17.a - Projected Sanitary Sewer

GENERAL

The purpose of this report is to provide a projection of the estimated wastewater demand for the proposed Tioga Downs Casino Resort. This report builds off of, and acts as an update to, the original Wastewater Treatment Facility Design Engineer's Report prepared for Tioga Downs Racino by Larson Design Group in September 2009. Tioga Downs is proposing a larger development consisting of, but not limited to:

- Event Center
- PJ Clarke's Restaurant
- Tioga Downs Hotel & Spa
- Cabana Pool Bar and Lounge
- Waterslide Casino Gaming Floor Expansion
- Virgil's Real BBQ and Honky Tonk bar
- Second Floor Office Expansion
- Waste Water Treatment Plant Expansion
- Well House Control Building Improvements.
- Festival and Outdoor Concert Event Space

The above mentioned Design Engineers Report is also included in this Exhibit VIII.C.17. for reference to existing wastewater flow and existing wastewater-related infrastructure.

1.0 PROPOSED DEVELOPMENT SEWAGE PRODUCTION

Table 1 lists the predicted sewage production, based upon the components of the proposed Phase 1 & 2 development.

Table 1. Phase 1 & 2 Projected Wastewater Flow

Development	Description	Units	Standard Flow Rate Unit (gpd)	Sewer System	Sewer System with 20% Reduction
Amenity Building	Spa (per station w/ sink)	10	200	2,000	1,600
	Laundry Room (per machine)	4	580	2,320	1,856
	Indoor Swimming Pool (per swimmer)	60	10	600	480
	Restroom Facility (per visitor)	1,000	5	5,000	4,000
	Staff Changing Rooms (per employee)	50	20	1,000	800
	PJ Clarke's Restaurant (per seat)	150	35	5,250	4,200
	Restaurant Lounge (per seat)	15	20	300	240
	Private Dining/Breakout (per seat)	50	20	1,000	800
	Event Center (per seat)	594	10	5,940	4,752
	Roof Terrace Lounge (max occupancy)	400	20	8,000	6,400
	Lower Terrace Lounge (max oocupancy)	300	20	6,000	4,800
New Hotel	Guest Rooms (per room)	161	110	17,710	17,710
Casino Gaming Floor Expansion	Lounge (per seat)	100	20	2,000	1,600
	Casino (per employee)	50	15	750	600
	Casino (square feet)	17,400	0.3	5,220	4,176
Office Expansion	Office Space (per worker)	50	20	1,000	800
Virgil's Real BBQ and Honky Tonk Bar	Restaurant (per seat)	200	50	10,000	8,000
	Restaurant Lounge (per seat)	20	20	400	320
Cabana Pool and Bar Lounge	Swimming Pool (per swimmer)	200	10	2,000	1,600
	Lounge / Bar (per seat)	135	20	2,700	2,160
	Pool Filter Backwash	1	3000	3000	3,000
				System Water Consumption	**With 20% Reduction for Water Saving Plumbing Fixtures**
				82,190	**69,894**

The hydraulic loading rate values used above are from the *Design Standards for Intermediate Sized Wastewater Treatment Systems 2014*, Section B.6.b.as issued by the New York State Department of Environmental Conservation (NYSDEC). With exception to the lodging value, the per-unit hydraulic loading rates may be decreased by twenty percent (20%) for establishments equipped with water saving plumbing fixtures.

2.0 SUMMARY OF TOTAL PROJECTED FLOW

Based upon the existing wastewater flow, and predicted wastewater flow, as seen in the tables above, the projected wastewater flow for the Tioga Downs Casino Resort can be seen in Table 4.

Table 4. Total Project Wastewater Flow

Description	Average Water Demand (gpd)
Existing Facility	22,200
Proposed Development	69,894
Total	**92,094**

Note: The total projected average day wastewater flow of 92,094 gallons was developed utilizing a 20% water reduction rate for water saving fixtures.

Exhibit VIII.C.17.a - Projected Water Usage

1.0 GENERAL

The purpose of this report is to provide a projection of the estimated water demand for the proposed gaming facility at Tioga Downs Casino. This report acts as an update to the water study portion of the evaluation performed by Keystone Associates, titled *Tioga Downs Water and Sewer Systems Engineering Report*, dated August 8, 2005. The original evaluation was based on development of a 100 room hotel. Tioga Downs is proposing a larger development consisting of, but not limited to:

- Event Center
- PJ Clarke's Restaurant
- Tioga Downs Hotel & Spa
- Cabana Pool Bar and Lounge
- Waterslide Casino Gaming Floor Expansion
- Virgil's Real BBQ and Honky Tonk bar
- Second Floor Office Expansion
- Waste Water Treatment Plant Expansion
- Well House Control Building Improvements.
- Festival and Outdoor Concert Event Space

2.0 EXISTING CONDITIONS

The existing water system serving the Tioga Downs Racino facility, located at 2384 West River Road in the Town of Nichols, Tioga County, NY, consists of two wells, a pump house, storage tank, and water distribution system. The water system has been classified as Transient Noncommunity (TNC) by Tioga County Health Department (NYS PWS ID#NY5330037), which currently requires a Grade C certified operator. The facility consists of a horse racing track and casino with other amenities. Within the facility, the water is used for daily needs of the workers and visitors such as washing hands, cleaning, flushing of toilets, drinking, and food preparation. Treated water from the storage tank is also used for watering the track from April to November of each year. Stored water can also be used for facility fire protection.

3.0 EXISTING WATER SUPPLY

There are two groundwater supply wells that serve the facility. Both wells are currently connected to an automated level control system with the water storage tank.

Well #1 shall be defined as the pre-existing well that has served the property since the 1970's. There are no known records for the development of Well #1 but field measurements indicate a well depth

of 81 feet and a static water depth of 45 feet below the adjacent ground surface. The well pump for Well #1 is known to pump at 90 gallons per minute (GPM).

Well #2 shall be defined as secondary well supply installed in the summer of 2012. . Well #2 is an 8" well with a 10" casing and 3" discharge. The pump is a CentriPro model VIS-T, size 5CLC, 7.5 hp, 3 stage well pump rated at 100 gpm for 145' of total dynamic head pressure. Well #2 has a static, non-pumping water level of 48.72 feet below the top of the well casing and has a total depth of 99 feet and screened over the depth interval of 84 to 99 feet.

Well #1 and #2 are located in close proximity to each other, approximately 16 feet away from each other. A pump test report is provided in Appendix A for pump testing procedures during Well #2. In summary, the pump test results indicate the aquifer serving the two wells has "sufficient available drawdown to support an intended rate of extraction of up to 100,000 gallons per day". An extraction rate of 100,000 gallons per day (roughly 70 GPM); can be served by one of the existing individual wells.

4.0 EXISTING WATER STORAGE

The existing 200,000 gallon steel tank is twenty feet (20') in diameter and 85 feet tall. During the redevelopment project in 2005, the tank was cleaned of any sediment and recoated. It is unknown if a cathodic protection system was installed as recommended by Keystone Associates. The tank anchoring system is showing signs of corrosion. The current piping configuration in the existing control building is an individual waterline into the water storage tank. Based on this configuration, the water storage tank is providing little to no disinfection contact time.

5.0 EXISTING WATER DISTRIBUTION

The water distribution system consists of primarily 10" and 8" PVC pipe installed as part of the 2005 redevelopment project. Cross contamination protection with the horse barns is provided via a double check valve assembly. A 10" mainline runs from the control building to western edge of the grandstand apron. From there, an 8" watermain loops around the existing casino facility and down to the east around the proposed hotel area. Gate valves and hydrants are located along the watermain routing for maintenance, operation and fire protection.

The distribution system through the barn area is original is comprised of asbestos-cement (AC) piping and will remain in service. Breaks have occurred on this branch system, but the 2005 distribution system upgrades and valving prevents disruption to the main water service to the casino facility.

6.0 EXISTING WATER DEMAND

Water usage from February 1, 2013 to November 31, 2013 has been analyzed for existing water demand. The calculations will be disseminated between racing season flows and non-racing season flows. As noted above, the existing water supply and storage system is used for domestic water use, barn use, and track watering purposes. Water usage is based on metering readings of the raw untreated well water pumped and the in-house domestic meter. Domestic Usage shall be defined as the water being used by the existing casino facility, i.e. as indicated by the in-house domestic meter reading. NON-Domestic Usage is the difference between the total amount of water pumped and the water used in the existing casino facility. Therefore, NON-Domestic Usage includes water used by the existing maintenance building, paddock, horse barns and racetrack watering.

Summary:

Racing Season (April through September)

Average Day Domestic Usage: 19,300 gallons per day
Maximum Day Domestic Usage: 60,100 gallons
Average Day NON-Domestic Usage: 23,100 gallons per day
Maximum Day NON-Domestic Usage: 64,100 gallons

NON-Racing Season

Average Day Domestic Usage: 17,300 gallons per day
Maximum Day Domestic Usage: 33,500 gallons
Average Day NON-Domestic Usage: 5,000 gallons per day

As seen in above, and reiterated in Table 1, there is a significant difference between the average day NON-domestic usage and the maximum day flow experienced during the racing season. This is attributed to the amount of water needed for racetrack watering purposes. For example, there were 19 occurrences in the 2011 racing season where the NON-domestic daily flow was over 50,000 gallons in a day, in 2012 there were 12 occasions.

Table 1. Existing Water Demand.

Description	Units	Standard Flow Rate Unit	Average Day Flow (gpd)
Existing Casino Facility	N/A	N/A	**19,300**
Other Domestic Water Usage			
Paddock Barn (per square foot)	12,000	0.1	1,200
Maintenance Office (per employee)	10	15	150
Horse Barns (per stall)	260	6	1,560
Subtotal			**2,910**
Track Watering	N/A	N/A	25,000

7.0 PROPOSED DEVELOPMENT WATER USAGE

The table below lists the predicted water consumption, based upon the components of the proposed development.

Table 2. Predicted Water Consumption

Development	Description	Units	Standard Flow Rate Unit (gpd)	Water System	Water System with 20% Reduction
Amenity Building	Spa (per station w/ sink)	10	200	2,000	1,600
	Laundry Room (per machine)	4	580	2,320	1,856
	Indoor Swimming Pool (per swimmer)	60	10	600	480
	Restroom Facility (per visitor)	1,000	5	5,000	4,000
	Staff Changing Rooms (per employee)	50	20	1,000	800
	PJ Clarke's Restaurant (per seat)	150	35	5,250	4,200
	Restaurant Lounge (per seat)	15	20	300	240
	Private Dining/Breakout (per seat)	50	20	1,000	800
	Event Center (per seat)	594	10	5,940	4,752
	Roof Terrace Lounge (max occupancy)	400	20	8,000	6,400
	Lower Terrace Lounge (max oocupancy)	300	20	6,000	4,800
New Hotel	Guest Rooms (per room)	161	110	17,710	17,710
Casino Gaming Floor Expansion	Lounge (per seat)	100	20	2,000	1,600
	Casino (per employee)	50	15	750	600
	Casino (square feet)	17,400	0.3	5,220	4,176
Office Expansion	Office Space (per worker)	50	20	1,000	800
Virgil's Real BBQ and Honky Tonk Bar	Restaurant (per seat)	200	50	10,000	8,000
	Restaurant Lounge (per seat)	20	20	400	320
Cabana Pool and Bar Lounge	Swimming Pool (per swimmer)	200	10	2,000	1,600
	Lounge / Bar (per seat)	135	20	2,700	2,160
	Pool Filter Backwash	1	3000	3000	3,000
				System Water Consumption	**With 20% Reduction for Water Saving Plumbing Fixtures**
				82,190	**69,894**

The hydraulic loading rate values used above are from the *Design Standards for Intermediate Sized Wastewater Treatment Systems 2014*, Section B.6.b., as issued by the New York State Department of Environmental Conservation (NYSDEC). With exception to the lodging value, the per-unit hydraulic loading rates may be decreased by twenty percent (20%) for establishments equipped with water saving

plumbing fixtures. The proposed waterslide was not included in the predicted water usage calculations because it is believed the system will recirculate the majority of the necessary water. Any water lost through use and evaporation is assumed to be negligent.

8.0 FUTURE WATER DEMAND

As of May, 2014, Tioga Downs is installing a separate water system to be dedicated to the Track Watering operations as required by that business. All other Project Site uses will be potable water uses and operate through the current public water system, PWS ID#NY5330037. Based upon the existing water demand, and predicted water demand, as seen in the tables above, the predicted future water demand can be seen in Table 3.

Table 3. Future Water Demand with Proposed Development

Description	Average Water Demand (gpd)
Existing Facility	22,200
Proposed Development	69,894
Total	92,094

The total predicted average day water demand of 92,094 gpd was developed including the 20% water reduction provided by water saving fixtures.

As detailed above, the current infrastructure related to the PWS, has adequate capacity to supply the future project demands. The existing water supply has a total pumping capacity of 190 gpm, approximately 270,000 gallons per day. The current well supply operates as a lead/lag system whereas an individual well supplies water when called for, unless in an emergency situation. An individual well can serve the future water demand in a 15 hour flow day.

9.0 REPORT PREPARATION

This report was prepared by:

Jason L. Bellis, PE
Larson Design Group
8836 State Route 434
Apalachin, NY 13732